IJAC1

6754

INDIANA JONES™*

JUDGE'S SURVIVAL PACK

OFFICIAL GAME ACCESSORY

FROM THE PRODUCERS OF DUNGEONS & DRAGONS® GAME

ACCESSORY PACK BY HAROLD JOHNSON

ADVENTURE FOLD-UP™ FIGURES BY D. & M. KAUTH

TSR, Inc.
PRODUCTS OF YOUR IMAGINATION™

™* THE ADVENTURES OF INDIANA JONES, game elements, and character names and likenesses are trademarks of Lucasfilm, Ltd. used under authorization.
© 1985 Lucasfilm, Ltd. All Rights Reserved.
DUNGEONS & DRAGONS, PRODUCTS OF YOUR IMAGINATION, ADVENTURE FOLD-UP, and the TSR logo are trademarks owned by TSR, Inc.

INDIANA JONES™*

120	——	——	95-61	60-31	30-06	——	——	• •
119	——	——	95-60	59-30	29-06	——	——	• •
118	——	——	95-60	59-30	29-06	——	——	• •
117	——	——	95-59	58-30	29-06	——	——	• •
116	——	——	95-59	58-30	29-06	——	——	• •
115	——	——	95-58	57-29	28-06	——	——	• •
114	——	——	95-58	57-29	28-06	——	——	• •
113	——	——	95-57	56-29	28-06	——	——	• •
112	——	——	95-57	56-29	28-06	——	——	• •
111	——	——	95-56	55-28	27-06	——	——	• •
110	——	——	95-56	55-28	27-06	——	——	• •
109	——	——	95-55	54-28	27-06	——	——	• •
108	——	——	95-55	54-28	27-06	——	——	• •
107	——	——	95-54	53-27	26-06	——	——	• •
106	——	——	95-54	53-27	26-06	——	——	• •
105	——	——	95-53	52-27	26-06	——	——	• •
104	——	——	95-53	52-27	26-06	——	——	• •
103	——	——	95-52	51-26	25-06	——	——	• •
102	——	——	95-52	51-26	25-06	——	——	• •
101	——	——	95-51	50-26	25-06	——	——	• •
99	——	——	95-50	49-25	24-06	——	——	• •
98	——	——	95-50	49-25	24-06	——	——	• •
97	——	——	95-49	48-25	24-06	——	——	• •
96	——	——	95-49	48-25	24-06	——	——	• •
95	——	——	95-48	47-24	23-06	——	——	• •
94	——	95—	94-48	47-24	23-06	——	——	• •
93	——	95-94	93-47	46-24	23-06	——	——	• •
92	——	95-93	92-47	46-24	23-06	——	——	• •
91	——	95-92	91-46	45-23	22-06	——	——	• •
90	——	95-91	90-46	45-23	22-06	——	——	• •
89	——	95-90	89-45	44-23	22-06	——	——	• •
88	——	95-89	88-45	44-23	22-06	——	——	• •
87	——	95-88	87-44	43-22	21-06	——	——	• •
86	——	95-87	86-44	43-22	21-06	——	——	• •
85	——	95-86	85-43	42-22	21-06	——	——	• •
84	——	95-85	84-43	42-22	21-06	——	——	• •
83	——	95-84	83-42	41-21	20-06	——	——	• •
82	——	95-83	82-42	41-21	20-06	——	——	• •
81	——	95-82	81-41	40-21	20-06	——	——	• •
80	——	95-81	80-41	40-21	20-06	——	——	• •
79	——	95-80	79-40	39-20	19-06	——	——	• •
78	——	95-79	78-40	39-20	19-06	——	——	• •
77	——	95-78	77-39	38-20	19-06	——	——	• •
76	——	95-77	76-39	38-20	19-06	——	——	• •
75	——	95-76	75-38	37-19	18-06	——	——	• •
74	——	95-75	74-38	37-19	18-06	——	——	• •
73	——	95-74	73-37	36-19	18-06	——	——	• •
72	——	95-73	72-37	36-19	18-06	——	——	• •
71	——	95-72	71-36	35-18	17-06	——	——	• •
70	——	95-71	70-36	35-18	17-06	——	——	• •
69	——	95-70	69-35	34-18	17-06	——	——	• •
68	——	95-69	68-35	34-18	17-06	——	——	• •
67	——	95-68	67-34	33-17	16-06	——	——	• •
66	——	95-67	66-34	33-17	16-06	——	——	• •
65	——	95-66	65-33	32-17	16-06	——	——	• •
64	——	95-65	64-33	32-17	16-06	——	——	• •
63	——	95-64	63-32	31-16	15-06	——	——	• •
62	——	95-63	62-32	31-16	15-06	——	——	• •
61	——	95-62	61-31	30-16	15-06	——	——	• •

© Lucasfilm Ltd. (LFL) 1986. All Rights Reserved.

™* THE ADVENTURES OF INDIANA JONES, game elements and character names and likenesses are trademarks of Lucasfilm Ltd. used under authorization.

INDIANA JONES™*

120	——	——	95-61	60-31	30-06	——	——	• •
119	——	——	95-60	59-30	29-06	——	——	• •
118	——	——	95-60	59-30	29-06	——	——	• •
117	——	——	95-59	58-30	29-06	——	——	• •
116	——	——	95-59	58-30	29-06	——	——	• •
115	——	——	95-58	57-29	28-06	——	——	• •
114	——	——	95-58	57-29	28-06	——	——	• •
113	——	——	95-57	56-29	28-06	——	——	• •
112	——	——	95-57	56-29	28-06	——	——	• •
111	——	——	95-56	55-28	27-06	——	——	• •
110	——	——	95-56	55-28	27-06	——	——	• •
109	——	——	95-55	54-28	27-06	——	——	• •
108	——	——	95-55	54-28	27-06	——	——	• •
107	——	——	95-54	53-27	26-06	——	——	• •
106	——	——	95-54	53-27	26-06	——	——	• •
105	——	——	95-53	52-27	26-06	——	——	• •
104	——	——	95-53	52-27	26-06	——	——	• •
103	——	——	95-52	51-26	25-06	——	——	• •
102	——	——	95-52	51-26	25-06	——	——	• •
101	——	——	95-51	50-26	25-06	——	——	• •
99	——	——	95-50	49-25	24-06	——	——	• •
98	——	——	95-50	49-25	24-06	——	——	• •
97	——	——	95-49	48-25	24-06	——	——	• •
96	——	——	95-49	48-25	24-06	——	——	• •
95	——	——	95-48	47-24	23-06	——	——	• •
94	——	95—	94-48	47-24	23-06	——	——	• •
93	——	95-94	93-47	46-24	23-06	——	——	• •
92	——	95-93	92-47	46-24	23-06	——	——	• •
91	——	95-92	91-46	45-23	22-06	——	——	• •
90	——	95-91	90-46	45-23	22-06	——	——	• •
89	——	95-90	89-45	44-23	22-06	——	——	• •
88	——	95-89	88-45	44-23	22-06	——	——	• •
87	——	95-88	87-44	43-22	21-06	——	——	• •
86	——	95-87	86-44	43-22	21-06	——	——	• •
85	——	95-86	85-43	42-22	21-06	——	——	• •
84	——	95-85	84-43	42-22	21-06	——	——	• •
83	——	95-84	83-42	41-21	20-06	——	——	• •
82	——	95-83	82-42	41-21	20-06	——	——	• •
81	——	95-82	81-41	40-21	20-06	——	——	• •
80	——	95-81	80-41	40-21	20-06	——	——	• •
79	——	95-80	79-40	39-20	19-06	——	——	• •
78	——	95-79	78-40	39-20	19-06	——	——	• •
77	——	95-78	77-39	38-20	19-06	——	——	• •
76	——	95-77	76-39	38-20	19-06	——	——	• •
75	——	95-76	75-38	37-19	18-06	——	——	• •
74	——	95-75	74-38	37-19	18-06	——	——	• •
73	——	95-74	73-37	36-19	18-06	——	——	• •
72	——	95-73	72-37	36-19	18-06	——	——	• •
71	——	95-72	71-36	35-18	17-06	——	——	• •
70	——	95-71	70-36	35-18	17-06	——	——	• •
69	——	95-70	69-35	34-18	17-06	——	——	• •
68	——	95-69	68-35	34-18	17-06	——	——	• •
67	——	95-68	67-34	33-17	16-06	——	——	• •
66	——	95-67	66-34	33-17	16-06	——	——	• •
65	——	95-66	65-33	32-17	16-06	——	——	• •
64	——	95-65	64-33	32-17	16-06	——	——	• •
63	——	95-64	63-32	31-16	15-06	——	——	• •
62	——	95-63	62-32	31-16	15-06	——	——	• •
61	——	95-62	61-31	30-16	15-06	——	——	• •

© Lucasfilm Ltd. (LFL) 1986. All Rights Reserved.

™* THE ADVENTURES OF INDIANA JONES, game elements and character names and likenesses are trademarks of Lucasfilm Ltd. used under authorization.

60	——	95-61	60-31	30-16	15-06	——	——	*	•	
59	——	95-60	59-30	29-15	14-06	——	——	*	•	
58	——	95-59	58-30	29-15	14-06	——	——	*	•	
57	——	95-58	57-29	28-15	14-06	——	——	*	•	
56	——	95-57	56-29	28-15	14-06	——	——	*	•	
55	——	95-56	55-28	27-14	13-06	——	——	*	•	
54	——	95-55	54-28	27-14	13-06	——	——	*	•	
53	——	95-54	53-27	26-14	13-06	——	——	*	•	
52	——	95-53	52-27	26-14	13-06	——	——	*	•	
51	——	95-52	51-26	25-13	12-06	——	——	*	•	
50	——	95-51	50-26	25-13	12-06	——	——	*	•	
49	——	95-50	49-25	24-13	12-06	——	——	*	•	
48	——	95-49	48-25	24-13	12-06	——	——	*	•	
47	95-—	94-48	47-24	23-12	11-06	——	——	•	•	
46	95-93	92-47	46-24	23-12	11-06	——	——	•	•	
45	95-91	90-46	45-23	22-12	11-06	——	——	•	•	
44	95-89	88-45	44-23	22-12	11-06	——	——	•	•	
43	95-87	86-44	43-22	21-11	10-06	——	——	•	•	
42	95-85	84-43	42-22	21-11	10-06	——	——	•	•	
41	95-83	82-42	41-21	20-11	10-06	——	——	•	•	
40	95-81	80-41	40-21	20-11	10-06	——	——	•	•	
39	95-79	78-40	39-20	19-10	09-06	——	——	•	•	
38	95-77	76-39	38-20	19-10	09-06	——	——	•	•	
37	95-75	74-38	37-19	18-10	09-06	——	——	•	•	
36	95-73	72-37	36-19	18-10	09-06	——	——	•	•	
35	95-71	70-36	35-18	17-09	08-06	——	——	•	•	
34	95-69	68-35	34-18	17-09	08-06	——	——	•	•	
33	95-67	66-34	33-17	16-09	08-06	——	——	•	•	
32	95-65	64-33	32-17	16-09	08-06	——	——	•	•	
31	95-63	62-32	31-16	15-08	07-06	——	——	•	•	
30	95-61	60-31	30-16	15-08	07-06	——	——	•	•	
29	95-59	58-30	29-15	14-08	07-06	——	——	•	•	
28	95-57	56-29	28-15	14-08	07-06	——	——	•	•	
27	95-55	54-28	27-14	13-07	—-06	——	——	•	•	
26	95-53	52-27	26-14	13-07	—-06	——	——	•	•	
25	95-51	50-26	25-13	12-07	—-06	——	——	•	•	
24	95-49	48-25	24-13	12-07	—-06	——	——	•	•	
23	95-47	46-24	23-12	11-06	——	——	——	•	□	
22	95-45	44-23	22-12	11-06	——	——	——	•	□	
21	95-43	42-22	21-11	10-06	——	——	——	•	□	
20	95-41	40-21	20-11	10-06	——	——	——	•	□	
19	95-39	38-20	19-10	09-06	——	——	——	•	□	
18	95-37	36-19	18-10	09-06	——	——	——	•	□	
17	95-35	34-18	17-09	08-06	——	——	——	•	□	
16	95-33	32-17	16-09	08-06	——	——	——	•	□	
15	95-31	30-16	15-08	07-06	——	——	——	•	□	
14	95-29	28-15	14-08	07-06	——	——	——	•	□	
13	95-27	26-14	13-07	—-06	——	——	——	•	□	
12	95-25	24-13	12-06	—-07	——	——	——	•	□	
11	95-23	22-12	11-06	——	——	——	——	□	□	
10	95-21	20-11	10-06	——	——	——	——	□	□	
9	95-19	18-10	09-06	——	——	——	——	□	□	
8	95-17	16-09	08-06	——	——	——	——	□	□	
7	95-15	14-08	07-06	——	——	——	——	□	□	
6	95-13	12-07	—-06	——	——	——	——	□	□	
5	95-11	10-06	——	——	——	——	——	□	□	
4	95-09	08-06	——	——	——	——	——	□	□	
3	95-07	—-06	——	——	——	——	——	□	□	
2	95-06	——	——	——	——	——	——	□	□	
1	95-06	——	——	——	——	——	——	□	□	

60	——	95-61	60-31	30-16	15-06	——	——	*	•	
59	——	95-60	59-30	29-15	14-06	——	——	*	•	
58	——	95-59	58-30	29-15	14-06	——	——	*	•	
57	——	95-58	57-29	28-15	14-06	——	——	*	•	
56	——	95-57	56-29	28-15	14-06	——	——	*	•	
55	——	95-56	55-28	27-14	13-06	——	——	*	•	
54	——	95-55	54-28	27-14	13-06	——	——	*	•	
53	——	95-54	53-27	26-14	13-06	——	——	*	•	
52	——	95-53	52-27	26-14	13-06	——	——	*	•	
51	——	95-52	51-26	25-13	12-06	——	——	*	•	
50	——	95-51	50-26	25-13	12-06	——	——	*	•	
49	——	95-50	49-25	24-13	12-06	——	——	*	•	
48	——	95-49	48-25	24-13	12-06	——	——	*	•	
47	95-—	94-48	47-24	23-12	11-06	——	——	•	•	
46	95-93	92-47	46-24	23-12	11-06	——	——	•	•	
45	95-91	90-46	45-23	22-12	11-06	——	——	•	•	
44	95-89	88-45	44-23	22-12	11-06	——	——	•	•	
43	95-87	86-44	43-22	21-11	10-06	——	——	•	•	
42	95-85	84-43	42-22	21-11	10-06	——	——	•	•	
41	95-83	82-42	41-21	20-11	10-06	——	——	•	•	
40	95-81	80-41	40-21	20-11	10-06	——	——	•	•	
39	95-79	78-40	39-20	19-10	09-06	——	——	•	•	
38	95-77	76-39	38-20	19-10	09-06	——	——	•	•	
37	95-75	74-38	37-19	18-10	09-06	——	——	•	•	
36	95-73	72-37	36-19	18-10	09-06	——	——	•	•	
35	95-71	70-36	35-18	17-09	08-06	——	——	•	•	
34	95-69	68-35	34-18	17-09	08-06	——	——	•	•	
33	95-67	66-34	33-17	16-09	08-06	——	——	•	•	
32	95-65	64-33	32-17	16-09	08-06	——	——	•	•	
31	95-63	62-32	31-16	15-08	07-06	——	——	•	•	
30	95-61	60-31	30-16	15-08	07-06	——	——	•	•	
29	95-59	58-30	29-15	14-08	07-06	——	——	•	•	
28	95-57	56-29	28-15	14-08	07-06	——	——	•	•	
27	95-55	54-28	27-14	13-07	—-06	——	——	•	•	
26	95-53	52-27	26-14	13-07	—-06	——	——	•	•	
25	95-51	50-26	25-13	12-07	—-06	——	——	•	•	
24	95-49	48-25	24-13	12-07	—-06	——	——	•	•	
23	95-47	46-24	23-12	11-06	——	——	——	•	□	
22	95-45	44-23	22-12	11-06	——	——	——	•	□	
21	95-43	42-22	21-11	10-06	——	——	——	•	□	
20	95-41	40-21	20-11	10-06	——	——	——	•	□	
19	95-39	38-20	19-10	09-06	——	——	——	•	□	
18	95-37	36-19	18-10	09-06	——	——	——	•	□	
17	95-35	34-18	17-09	08-06	——	——	——	•	□	
16	95-33	32-17	16-09	08-06	——	——	——	•	□	
15	95-31	30-16	15-08	07-06	——	——	——	•	□	
14	95-29	28-15	14-08	07-06	——	——	——	•	□	
13	95-27	26-14	13-07	—-06	——	——	——	•	□	
12	95-25	24-13	12-06	—-07	——	——	——	•	□	
11	95-23	22-12	11-06	——	——	——	——	□	□	
10	95-21	20-11	10-06	——	——	——	——	□	□	
9	95-19	18-10	09-06	——	——	——	——	□	□	
8	95-17	16-09	08-06	——	——	——	——	□	□	
7	95-15	14-08	07-06	——	——	——	——	□	□	
6	95-13	12-07	—-06	——	——	——	——	□	□	
5	95-11	10-06	——	——	——	——	——	□	□	
4	95-09	08-06	——	——	——	——	——	□	□	
3	95-07	—-06	——	——	——	——	——	□	□	
2	95-06	——	——	——	——	——	——	□	□	
1	95-06	——	——	——	——	——	——	□	□	

© Lucasfilm Ltd. (LFL) 1985. All Rights Reserved.

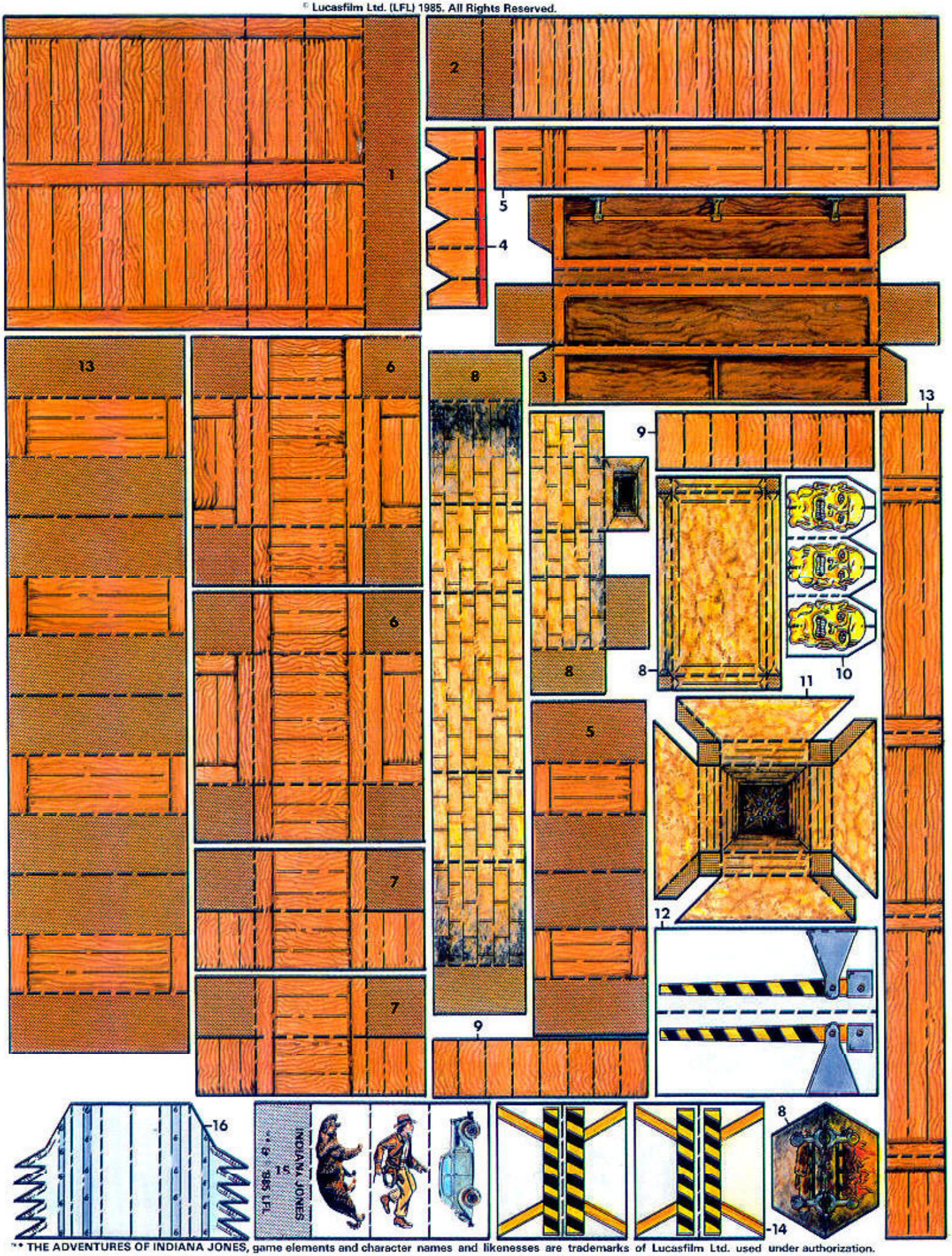

™* THE ADVENTURES OF INDIANA JONES, game elements and character names and likenesses are trademarks of Lucasfilm Ltd. used under authorization.

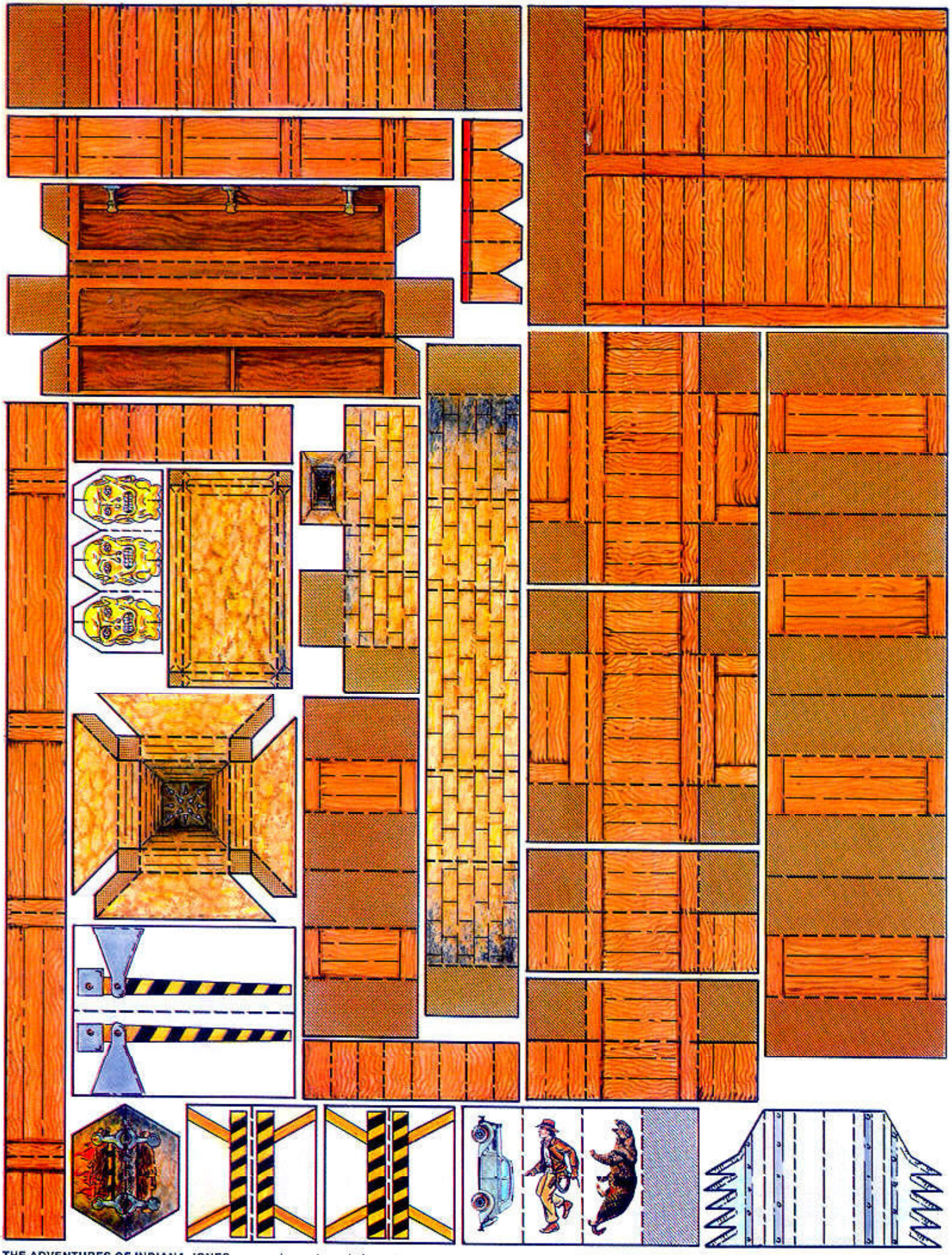

THE ADVENTURES OF INDIANA JONES, game elements and character names and likenesses are trademarks of Lucasfilm, Ltd. Used under authorization.

© Lucasfilm Ltd. (LFL) 1985. All Rights Reserved.

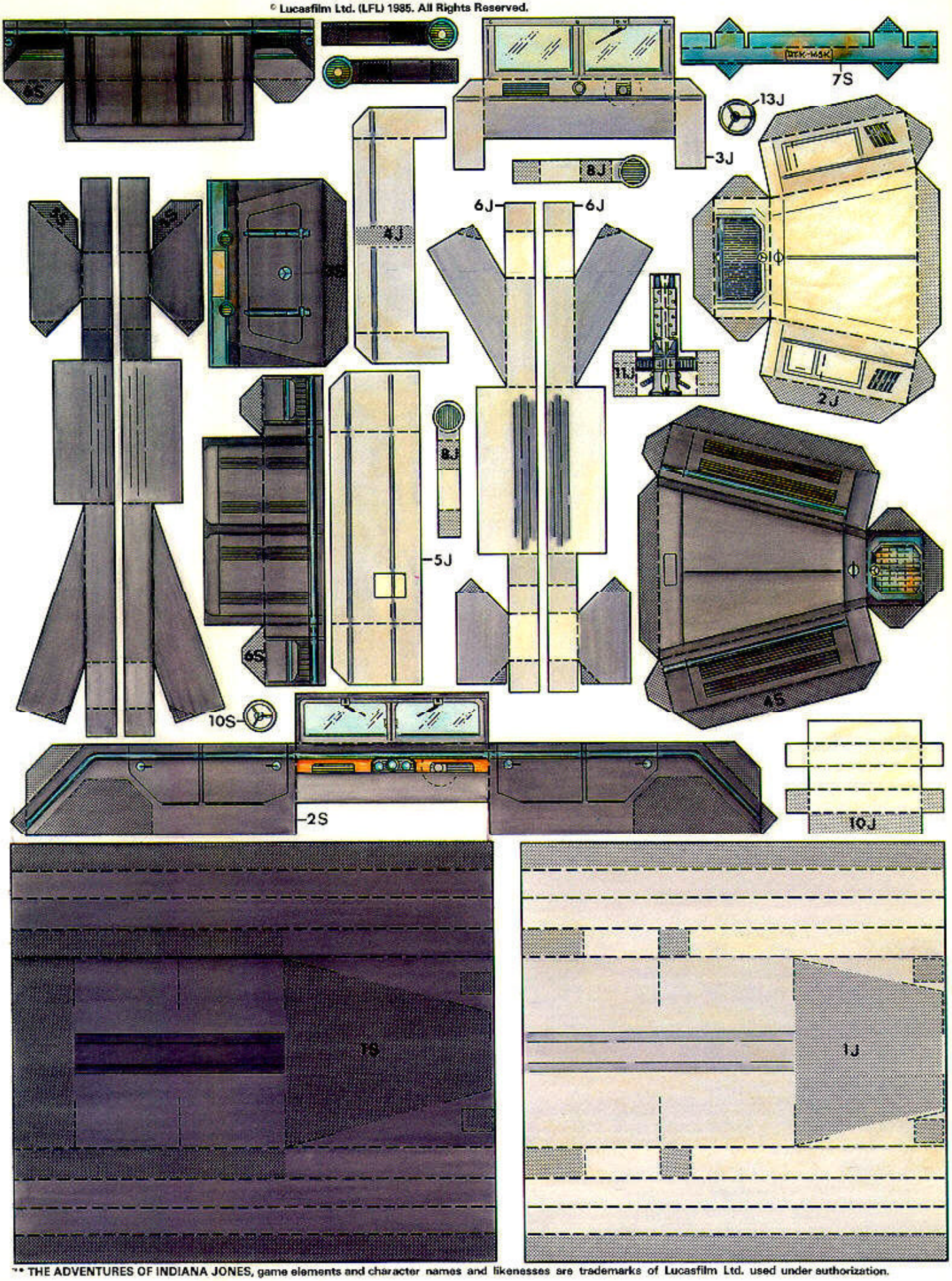

** THE ADVENTURES OF INDIANA JONES, game elements and character names and likenesses are trademarks of Lucasfilm Ltd. used under authorization.

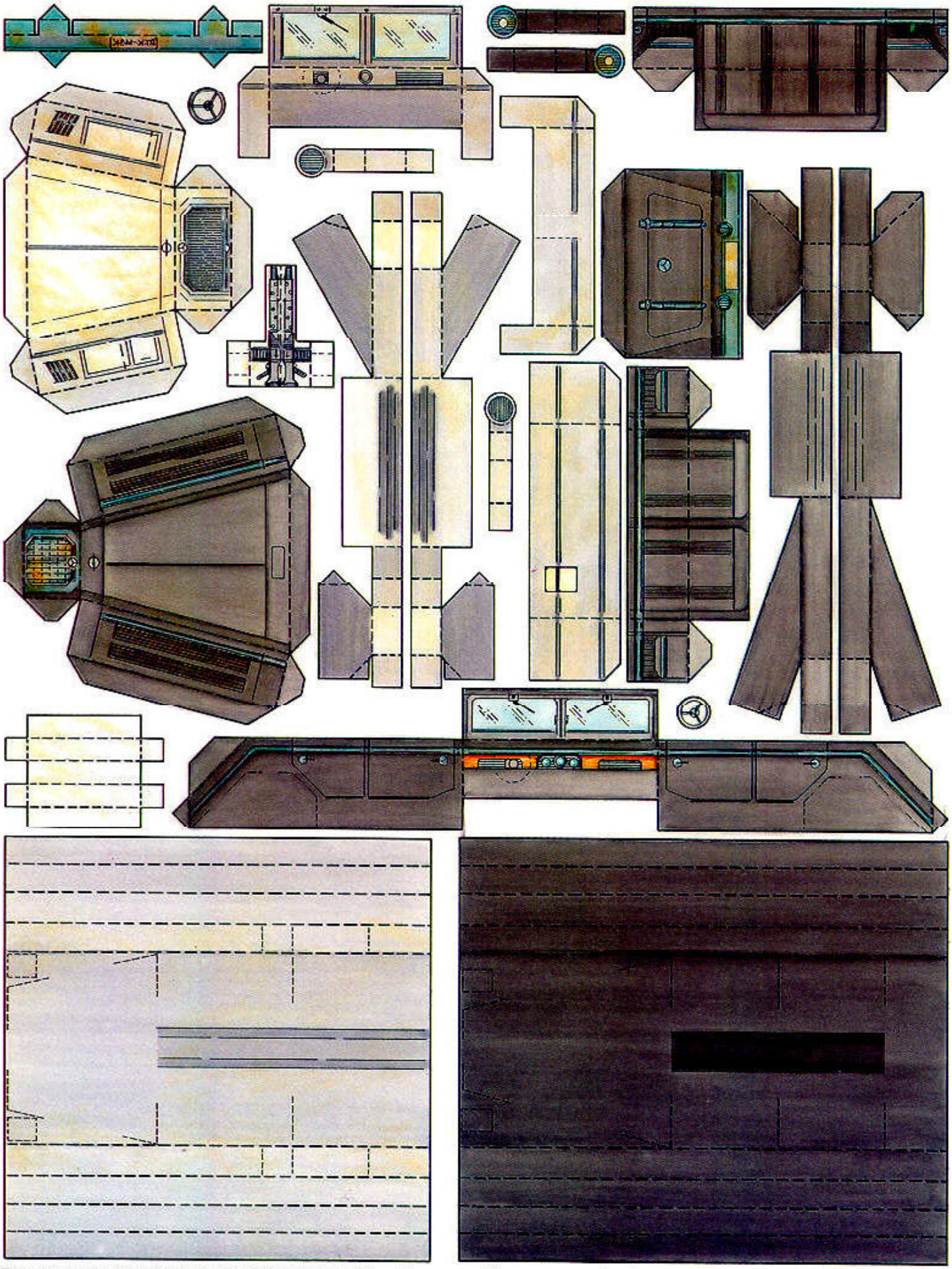

THE ADVENTURES OF INDIANA JONES, game elements and character names and likenesses are trademarks of Lucasfilm, Ltd. Used under authorization.

©1985 Lucasfilm, Ltd. All Rights Reserved.

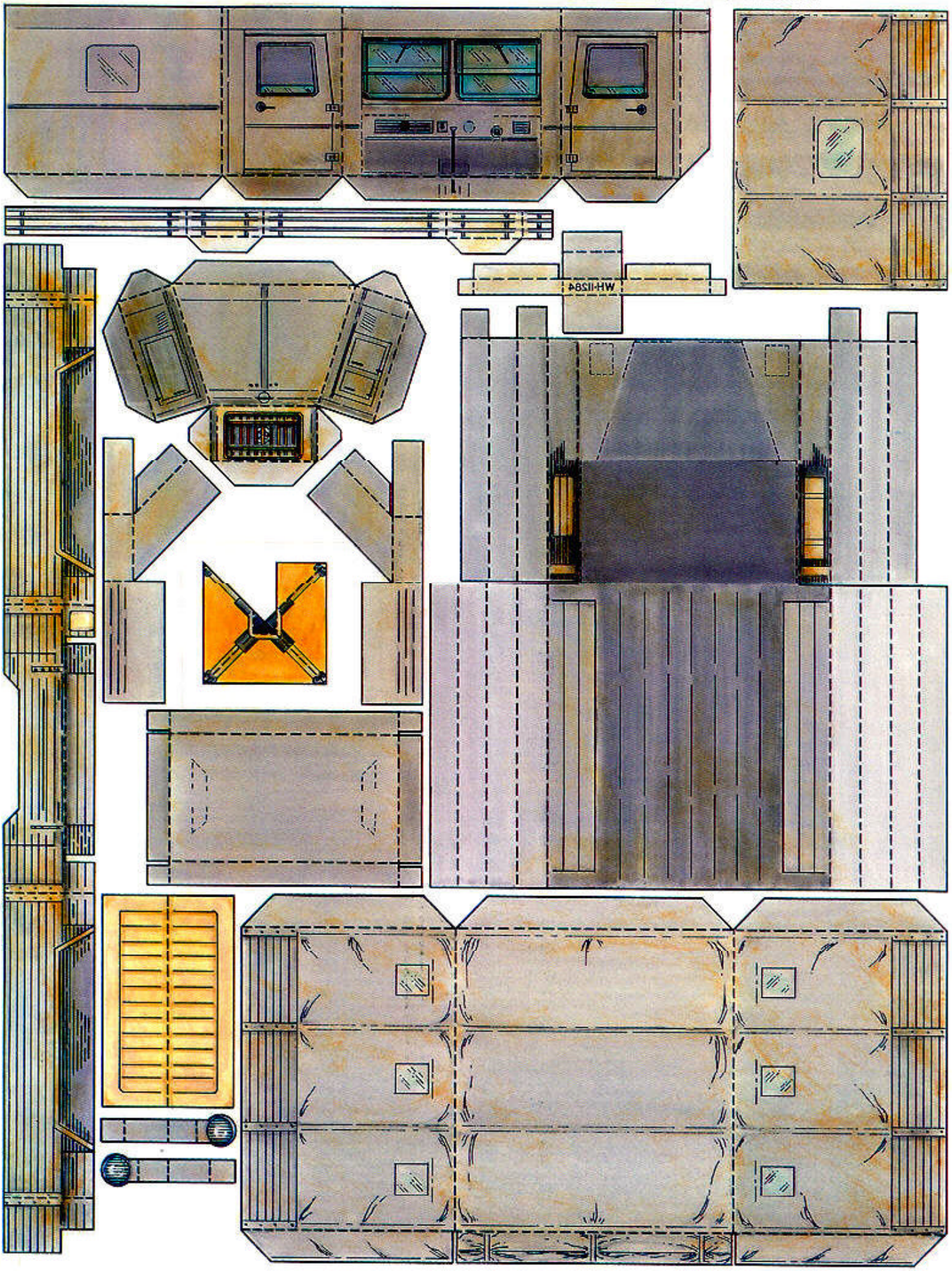

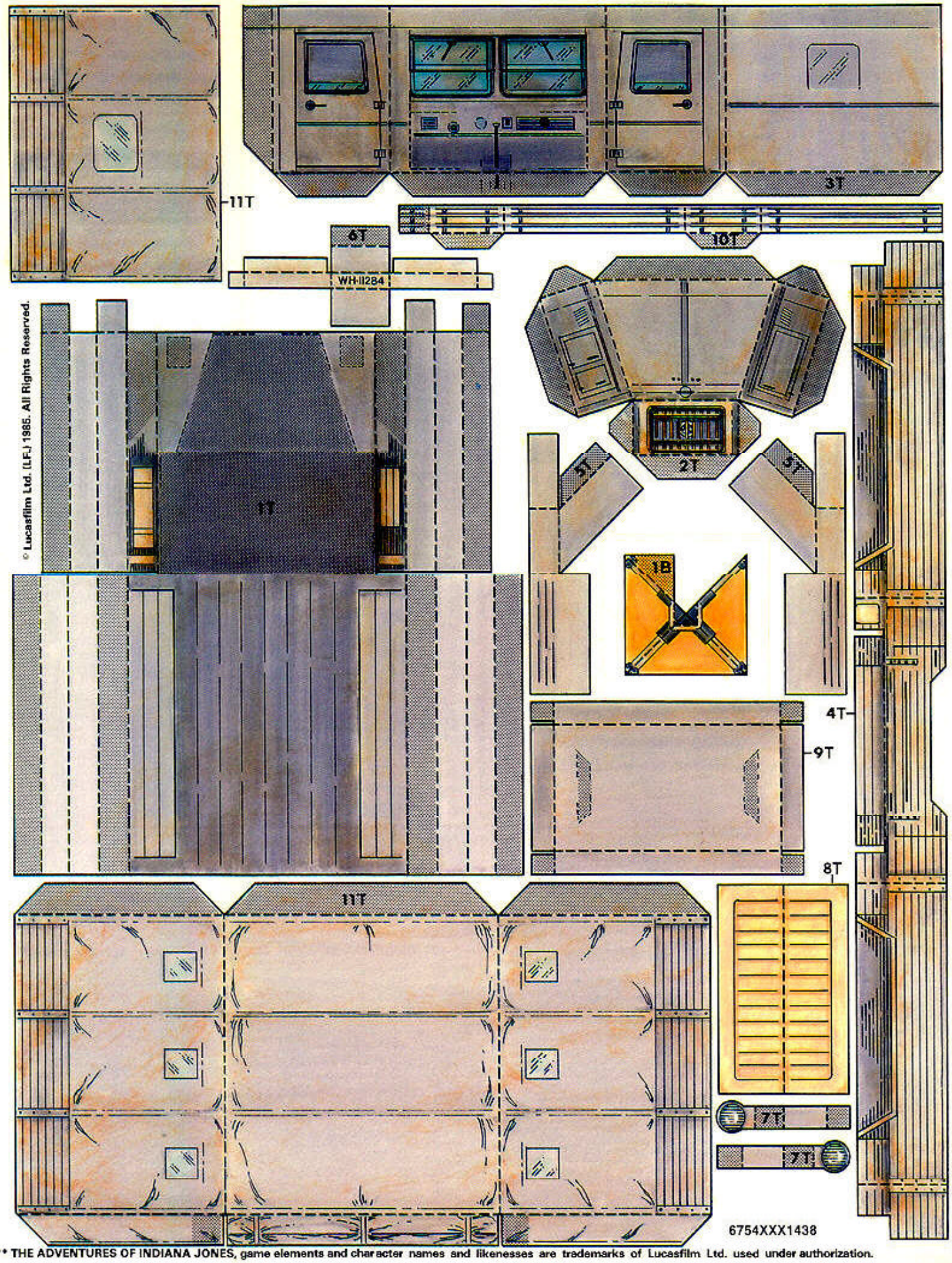

© Lucasfilm Ltd. (LF.) 1985. All Rights Reserved.

** THE ADVENTURES OF INDIANA JONES, game elements and character names and likenesses are trademarks of Lucasfilm Ltd. used under authorization.

©1985 Lucasfilm, Ltd. All Rights Reserved.

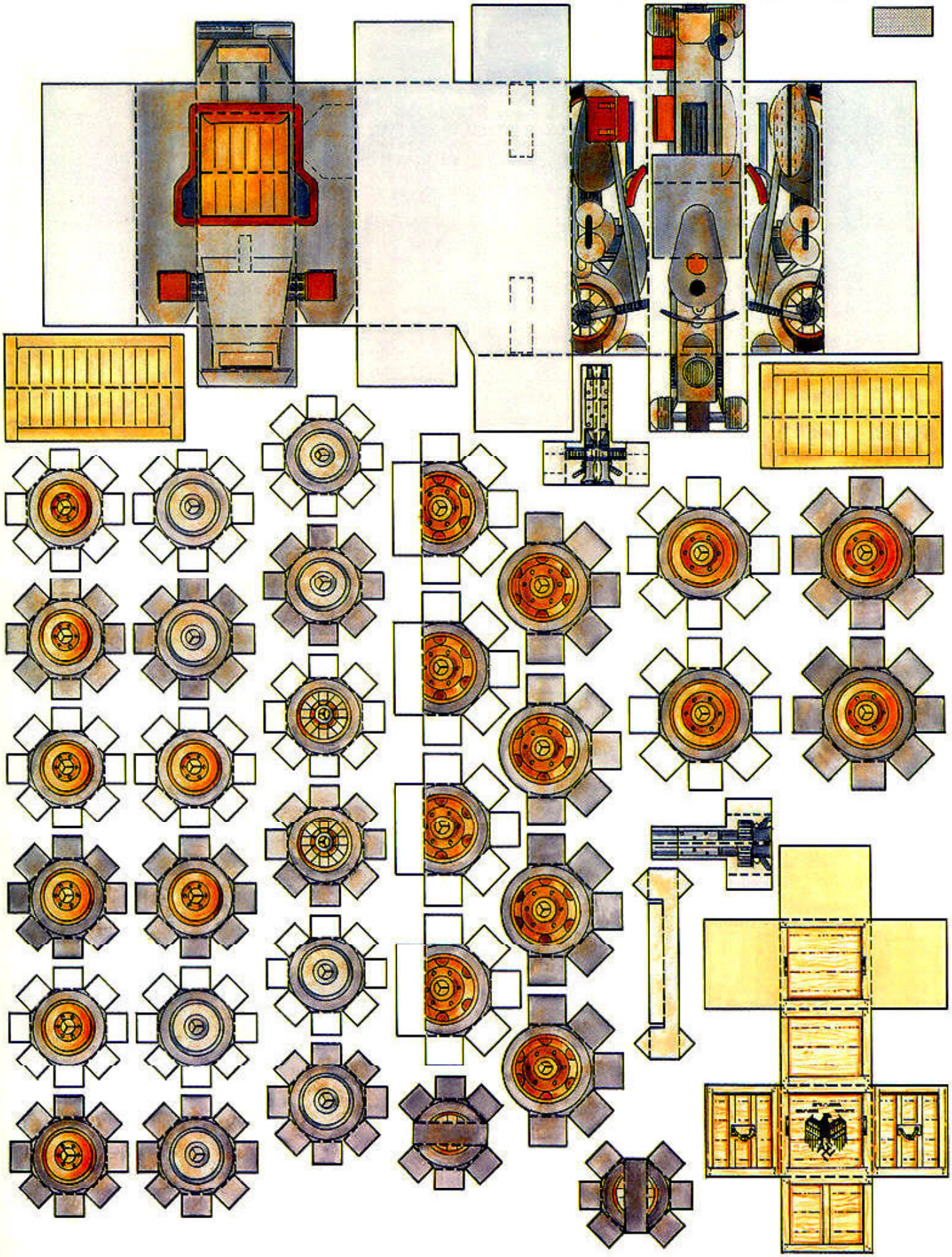

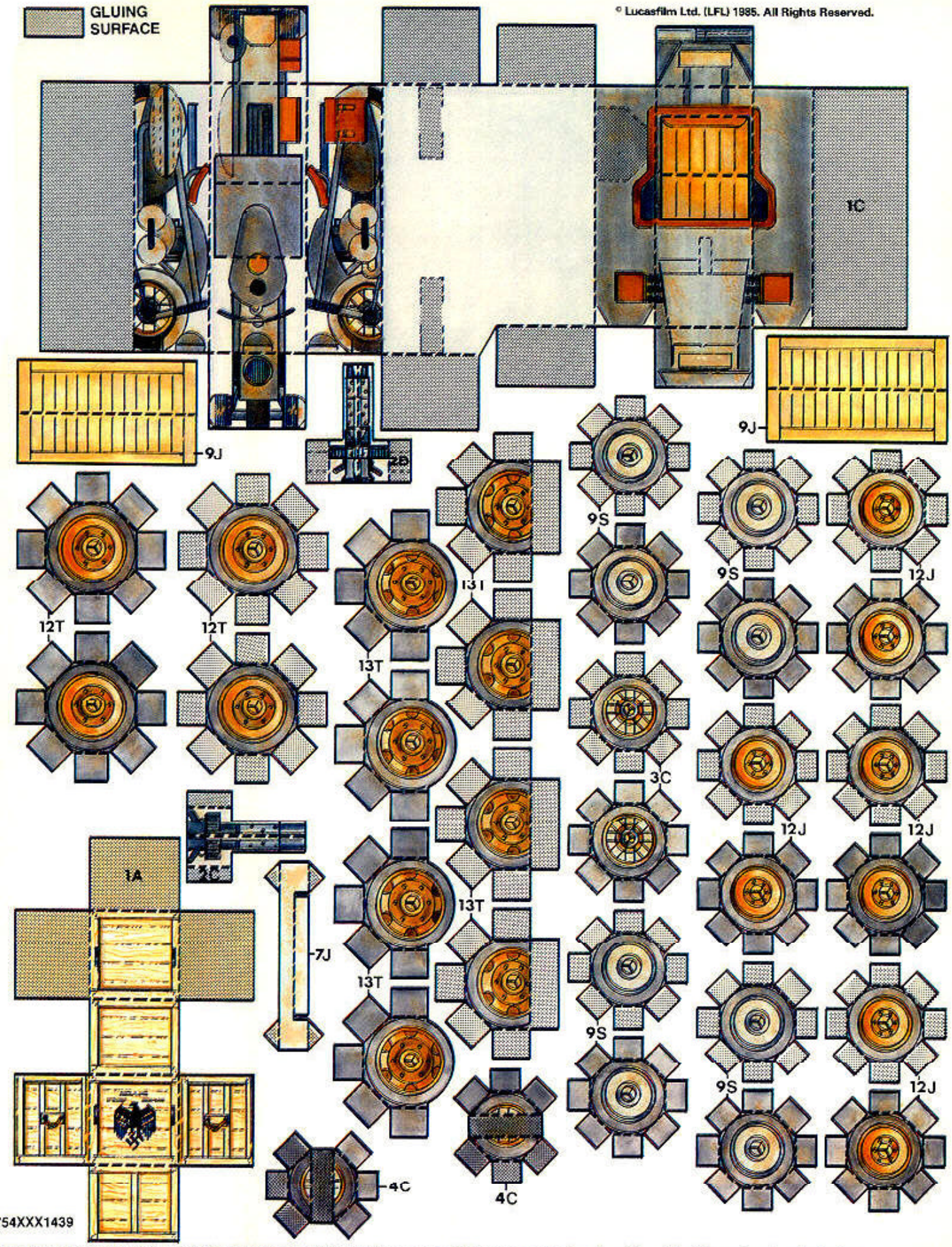

™ THE ADVENTURES OF INDIANA JONES, game elements and character names and likenesses are trademarks of Lucasfilm Ltd. used under authorization.

HOW TO ASSEMBLE COMPUTER:

The INDIANA JONES™* Adventure computer is easy to assemble.

Tools Needed

- Sharp, small scissors
- White glue or paste
- Tape

Cutting Apart

1. Cut apart the two computer slides.
2. Cut apart the two score cards on the facing page.
3. "Score" — Using a ruler and a pen draw along the dotted line on the slides.
4. Now, being careful, cut a slot from the right side of the slide along the base of the gray spaces and cut out the windows.

Assembling

Once all of the gray windows have been cut out fold the ends of the slides back. (For more support you can use transparent tape on the back of the slide to tape the slots.)

Apply glue to the area indicated and glue a front panel to a back panel by gluing each end of the slide making a tube. (See diagram).

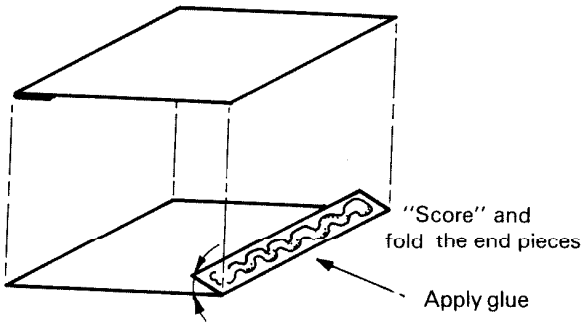

How To Use

To use the Adventure computer, insert one card into each slide, matching the side of the card to the appropriate side of the slide.

™* THE ADVENTURES OF INDIANA JONES, game elements and character names and likenesses are trademarks of Lucasfilm, Ltd. used under authorization. © 1985 Lucasfilm, Ltd. All Rights Reserved.

GLUE BOTH SIDES OF FLAP

(SCORES 120-61)

◄ 2× 00-96 -06 05-01

- NORMAL 00-96 -06 05-01
◄ NORMAL 00-96 95- -06 05-01

- 1/2 × 00-96 95- 05-01
- 1/4 × 00-96 95- 05-01

ABILITY CHECK RESULTS

DAMAGE	BAD BREAK	NO DAMAGE	LIGHT	MEDIUM	SERIOUS	LUCKY BREAK
INSTINCT	BAD BREAK	NO INFO	BAD FEELING	WHAT OR WHERE	THE BIG PICTURE	LUCKY BREAK
APPEAL	BAD BREAK	NO LUCK	NEUTRAL	HELPFUL	FRIENDLY	LUCKY BREAK

© 1985 Lucasfilm, Ltd. All Rights Reserved.

GLUE BOTH SIDES OF FLAP

(SCORES 60-01)

- 2× 00-96 -06 05-01 *
◄ 2× 00-96 95- -06 05-01 •
- 2× 00-96 95- 05-01 □

◄ NORMAL 00-96 95- -06 05-01 •
- NORMAL 00-96 95- 05-01 □

- 1/2 × 00-96 95- 0501
- 1/4 × 00-96 95- 05-01

HOW TO USE:

1. Locate score and move to desired modifier.
2. If modifier is **2 ×** or **Normal** match up the symbols on the far right (if they don't match you are using the wrong row)
3. Roll the dice and locate the range of numbers the dice roll falls within on that row.
4. The result of the roll is indicated by the color band.

GLUE BOTH SIDES OF FLAP

(SCORES 120-61)

◄ 2× 00-96 -06 05-01

- NORMAL 00-96 -06 05-01
◄ NORMAL 00-96 95- -06 05-01

- 1/2 × 00-96 95- 05-01
- 1/4 × 00-96 95- 05-01

ABILITY CHECK RESULTS

DAMAGE	BAD BREAK	NO DAMAGE	LIGHT	MEDIUM	SERIOUS	LUCKY BREAK
INSTINCT	BAD BREAK	NO INFO	BAD FEELING	WHAT OR WHERE	THE BIG PICTURE	LUCKY BREAK
APPEAL	BAD BREAK	NO LUCK	NEUTRAL	HELPFUL	FRIENDLY	LUCKY BREAK

© 1985 Lucasfilm, Ltd. All Rights Reserved.

GLUE BOTH SIDES OF FLAP

(SCORES 60-01)

- 2× 00-96 -06 05-01 *
◄ 2× 00-96 95- -06 05-01 •
- 2× 00-96 95- 05-01 □

◄ NORMAL 00-96 95- -06 05-01 •
- NORMAL 00-96 95- 05-01 □

- 1/2 × 00-96 95- 0501
- 1/4 × 00-96 95- 05-01

HOW TO USE:

1. Locate score and move to desired modifier.
2. If modifier is **2 ×** or **Normal** match up the symbols on the far right (if they don't match you are using the wrong row).
3. Roll the dice and locate the range of numbers the dice roll falls within on that row.
4. The result of the roll is indicated by the color band.

© Lucasfilm Ltd. (LFL) 1985. All Rights Reserved.
™ THE ADVENTURES OF INDIANA JONES, game elements and character names and likenesses are trademarks of Lucasfilm Ltd. used under authorization.

6754XXX1402

INDIANA JONES™*

JUDGE'S SURVIVAL PACK

ACCESSORY DESIGN:
HAROLD JOHNSON
with ED CARMIEN
ADVENTURE FOLD-UP™ FIGURES DESIGN:
DENNIS KAUTH
MARSHA KAUTH
COVER:
CLYDE CALDWELL
GRAPHIC DESIGN:
DENNIS KAUTH
ILLUSTRATIONS:
DENNIS KAUTH
MARSHA KAUTH
CARTOGRAPHY & KEYLINE:
DAVE SUTHERLAND III
TYPOGRAPHER:
BETTY ELMORE

The names of characters used herein are fictitious and do not refer to any persons living or dead. Any similarity to any persons living or dead is merely coincidental.

This accessory pack is protected under the copyright laws of the United States of America. Any reproduction or other unauthorized use of the material or artwork contained herein is prohibited without the express written permission of Lucasfilm Ltd. and TSR Inc.

Distributed to the book trade by Random House Inc. and in Canada by Random House of Canada, Ltd.
Distributed to the toy and hobby trade by regional distributors.
Distributed in the United Kingdom by TSR UK Ltd.

TSR, Inc.
POB 756
Lake Geneva
WI 53147

TSR UK Ltd.
The Mill, Rathmore Road
Cambridge CB1 4AD
United Kingdom

TSR, Inc.
PRODUCTS OF YOUR IMAGINATION

™* THE ADVENTURES OF INDIANA JONES, game elements and character names and likenesses are trademarks of Lucasfilm Ltd. Used under Authorization. ©1985 Lucasfilm Ltd. All Rights Reserved.

PRODUCTS OF YOUR IMAGINATION, ADVENTURE FOLD-UP, and the TSR logo are trademarks owned by TSR, Inc.

HOW TO USE 1
CREATING CHARACTERS 2
RANDOM RUINS 3
DEALING WITH THE UNKNOWN 7
NEW FLOW CHARTS 8
SPICING UP CHASES 10
STUNTING WITH CARS 10
FOOT CHASES 10
NEW HAZARD & SHORTCUT TABLES 10
RUNES AND SECRET WRITINGS 11
GENERIC RUIN MAPS 12
VEHICLE ASSEMBLY INSTRUCTIONS 13
GENERIC FORM ASSEMBLY INSTRUCTIONS 16

HOW TO USE THIS PRODUCT

The INDIANA JONES™* Survival Pack is a collection of new materials to add new excitement to adventures. The most colorful part is the four ADVENTURE FOLD-UP™ vehicles and barroom figures. Complete instructions for assembly are given in the back of this booklet and should be read and followed carefully.

In addition, there is something new; two colorful combat computers that you assemble yourself. These computers will speed play by doing all the figuring to determine the results of an Ability Check. Instructions for assembly and use are printed on the computers.

Also included is a supplemental reference screen for the judge, plus sections to help you create ruins faster and new flow charts and rules for making chases more interesting.

SUPPLEMENTAL JUDGE'S SCREEN

The new judge's screen provides information on old and new weapons, vehicles and commonly encountered animals. Study the tables carefully; rules on how to use the information provided are in the game rules.

If you want to use a weapon, vehicle or animal not listed on the chart, use an entry that is similar — such as using the APE scores for an Yeti, or the ELEPHANT for a Dinosaur.

Abbreviations and their meanings are given on the table below. Following are some additional explanations.

Aircraft, vehicle: Aircraft have two new vehicle scores — Climb and Dive. These scores are added or subtracted from the Speed and Acceleration when climbing or diving. For simplicity, there are only three heights to worry about in the game:

Low — near the ground, trees & buildings;
Level — above major obstacles except skyscrapers, clouds and mountains;
High — thin, cold atmosphere; above the clouds.

If there is combat between two planes, just determine how close they are and whether they are below, level, or above the foe.

Aircraft are affected by the speed of the wind and storms. In fact, balloons can only move in the direction of the wind — though the wind may be blowing three different directions at the different levels. To determine if the wind affects flight, roll 10-sided die once each hour of movement. The judge decides which way the wind blows.

1 = TAILWIND (add 1d10x10 mph to speed);
2-8 = NO EFFECT
9 = HEADWIND (subtract 1d10x10 mph);
10 = STORM (Headwind! Cannot turn! Vehicle Rating Check of blue or white result is Forced Landing; a Bad Break is a Crash.)

Boats: Boats may be powered by fuel, wind or muscle. They are affected by currents and wind in a similar manner as aircraft. The judge should decide if there is any current or wind and then use the following effects.

UP CURRENT/AGAINST THE WIND (subtract 1d10/2 × 10 mph to speed);
DOWN CURRENT/WITH THE WIND — (add 1d10/2 × 10 mph to speed);
STORM/CHOPPY WATERS (Treat as Up Current. Every time craft turns make a Vehicle Rating Check; a blue or white result means the boat is sinking in 1d10 min.; a Bad Break means the boat is capsized)

Animals: Groups of animals are listed on the chart including: flocks, herds, packs, piranha, and swarms. These groups may attack several times a round. If an animal is involved in a chase use the parenthetical mph speed if listed or else use the equivalent man Movement speed.

6754 Printed in U.S.A. ISBN 0-88038-191-4

GENERATING CHARACTERS FOR ADVENTURES

There are times when the characters provided in the game are simply not suitable for the adventure you have planned. In these cases you can create your own characters using the rules below.

Step #1. Determine Ratings.

Roll percentile dice for each Attribute Rating and write the result in pencil next the the Attribute name.

Step #2. Modify the Ratings.

You have 30 points you can divide between the Attribute Ratings to improve them. The only restriction is that no Attribute can be raised higher than 70. Scores that are above 70 are kept, they just cannot be increased. Write the modified Attribute Rating in the space, erasing the previous number.

Step #3. Determine the Modified Columns.

Write the ×2, ½, and ¼ Modified Ratings in the proper spaces. Round all fractions to the nearest even number.

Step #4. Determine Background.

To find out what skills your character has, you must choose what his background was before he got caught up in wild adventures. You can choose one of the following categories:

Education
Soldiering
Real World

Education: Your character was enrolled in college. Roll one die and add 1 for every 10 points of Instinct your character has. If the modified roll is 10 or greater, your character completed his undergraduate studies. If the roll is less, your character dropped out. If your character wants to continue into graduate school, repeat the process but only add 1 point for every 20 points of Instinct greater than 70. Your character now has a doctorate, but no tenure. The number of skills he can take are listed below.

Undergraduate dropout — Choose one Education skill
Undergraduate degree — Choose two Education skills
Doctorate — Choose three Education skills

Real World: Your character has had a variety of jobs. You can select 2 skills from the Real World list.

Soldiering: Your character joined the army, navy or airforce. The military being what it is, you have no choice about the skills you gain. You automatically receive a bonus of 10 on your Prowess Attribute and make one percentile die roll on the Soldiering Knowledge list.

In addition to these, there is a 10% chance that your character has an additional knowledge. Any Knowledge but Education can be selected.

Step #5: Choose knowledges.

According to your character's background, select or roll the Knowledge on the table below.

Education	Real World
Archaelogy	Driving
Medical	Entertainment
Photography	First aid
Surveying	Hotwiring
+ 10 Appeal	Lockpicking
+ 10 Instinct	Mechanical
Any language	Picking pockets
	Sailing

	Soldiering
1-10	Driving
11-20	Explosives
21-30	First Aid
31-40	Heavy weapons
41-50	Karate
51-60	Mechanical
61-70	Parachuting
71-80	Piloting
81-90	Sailing
91-00	Choose 1 and roll again

Your referee can create additional knowledge areas if he desires.

Step #6. Select Your Languages

Your character can speak the native tongue of his country, so first you should decide what nationally your character is. To learn additional languages, you must make Instinct Checks. For each successful check, you can add another language to your character's list. When you fail a Check you can add no more languages. The first Check is at the Normal Rating, the second at ½, and all remaining at ¼.

You may choose any language, living or dead, of the known world for your character.

Step #7. Get Your Equipment

To get your character started, you need some money to purchase your equipment. Roll one die and add the number of skills and 1 for every 10 points of Appeal above 70 that your character has. Multiply the result by 100. This is how many dollars your character has to buy equipment and put into savings. You can purchase equipment for your character from the lists given in the rules. In addition, your referee may allow you to buy other items not on the list.

In addition to any equipment you buy, your character also has a reasonable wardrobe of clothing and a place to live. These things are free when you start.

Step #8. Final Details

With this information, you are ready to adventure. Of course, you could do a few other things — give your character a name, decide whether it is male or female, decide what he looks like, and how old he is. Then, you're ready to go out and take on the world!

© 1981 LFL.

RANDOM RUINS

The heart of an INDIANA JONES™* adventure is the exploration of an ancient ruin. This section is designed to help the judge to quickly create interesting ruins without a lot of work by using a series of random tables.

It is easy to follow the step by step procedure to create your own ruins. It requires the two dice from the game and making choices. The steps to follow to create a ruin are numbered and detailed on this page. The tables to be used are numbered the same as the step with which they are used. If there are several tables for use with a step, they will be numbered first with the number of the step, then separated by a period there will be a second number (eg. 1.2, 6.3, etc.).

If there are several tables, the second die may be used to indicate which table to use. This will be noted at the top of the tables.

At times you may prefer to choose a certain result, rather than roll dice. In this case, the tables may be used as a handy reference. If your ruin doesn't make sense, don't be afraid to make changes. This is only a beginning and you may want to expand on the current tables or create your own.

Creating a Random Ruin

1) **Define the Find.** When player characters are exploring a ruin, they are usually looking for a special archeaological "Find" that is unique and will identify who built the ruin or whose tomb it is. A "Find" is the goal of the adventure, and once a character has found it, he has succeeded.

"Finds" come in many forms and you should use the **Find Tables** to determine what the item looks like. Finds may be merely special proof that the ruin was found or it may be a fake created by natives or from another era than that of the ruin. Fakes turned over to museums will hurt a character's reputation.

To determine what a Find is roll two dice one for what Type and the other to determine its Nature. Once you know its Type, you may choose what it is specifically. If a Find is Special, roll two dice and determine what it can do.

In this game, a Find may possess miraculous powers. You should be careful when a Find has special powers. The player characters should not be allowed to keep such an item, for it would make them super men. Special Finds should be fought over by villains and are used to make an adventure interesting, giving a character a special power in an emergency. But once they have livened up the story they should be lost or taken away. For further information, read the section on **Dealing with the Unknown.**

1.0 FINDS

1.1 TYPE OF FIND

To locate a Find in a ruin, the judge may roll room contents randomly until a Find is indicated or may select a specific place in the ruin for the Find. The characters should have to overcome/pass at least five Noteworthy items before locating a Find.

If you want to make it harder, pick a number from 1 to 5; this represents the number of rooms where the Find might be. Every time a Find is indicated, check the chance that the Find is there; eventually it will be located. To determine if the Find is really in a room, determine how many rooms it may still be in, including this one (see the chart below). Roll one die and if the number is less than or equal to the chance on the chart below, the Find is here in this room. If the room does not contain a Find, it has Treasure instead.

Number of Rooms Remaining	Chance it is Here
5	2
4	3
3	4
2	5
1	THIS IS IT!

2) **Determine the Type of Ruin.** Roll one die or pick what type the ruin is. The Type will give a short explanation of what it is, what it looks like, some examples and the number of entrances it may have.

3) **Define the Entrances.** The judge should choose how many entrances there are into the ruin from the range given with the Ruin Type.

Next, roll one die and add the Type number for each entrance and consult the **Entrance Tables.** This will define the way the entrance is reached. Roll the second die, or pick one of the Entry Halls to start the ruin. If all the routes deadend, add Secret Ways to continue the ruin to the Find.

RANDOM RUIN SYNOPSIS

1) **DEFINE THE FIND.**

2) **DETERMINE RUIN TYPE.**

3) **DEFINE THE ENTRANCES.**

4) **DETERMINE NEXT AREA — HALL OR ROOM.**

5) **DETERMINE GENERAL DESCRIPTION.**

6) **DETERMINE NOTEWORTHY ITEM TYPE.**

7) **DEFINE THE NOTEWORTHY ITEMS.**

4) **Determine if Hall or Room is Next.** Pick the path you want and then roll two dice to determine if the next area is a hall or room. One die will indicate the area is a hall or room. An odd number is a hall, an even number is a room. The second will give a pair of diagrams from which to choose shape.

The first die will also indicate if the area is empty or contains something Noteworthy.

First Die Roll	Meaning
Odd (1,3,5,7,9)	Hall
Even(2,4,6,8,0)	Room
1,2,3,4	Nothing
5,6,7,8,9,0	Something Noteworthy

5) **Determine General Description.** Roll two dice. The first die will note what is being described: odd — a Feature; even — Contents. The second die will indicate a specific entry. If Contents are indicated there are separate tables for Halls and Rooms.

Roll the two dice again for Description. The first indicates which Table to use; the second indicates a specific Description.

6) **Determine Noteworthy Type.** If the area has something Noteworthy, roll two dice and consult the Hall or Room Noteworthy table to determine the Type.

7) **Define the Noteworthy Item.** Once the Type of Noteworthy item is determined, first determine where it is located in area, then roll two dice and consult the appropriate tables.

Noteworthy Types include:
- Treasure
- Traps
- Secret Ways
- Creatures
- Obstacles
- Predecessors
- Spectacles
- Incredibles and Dilemmas.

(1) INSCRIPTION	(2) REMAINS	(3,4) SYMBOL	(5,6) PRECIOUS*	(7) ARTIFACT	(8) WEAPON	(9) LIVING PROOF	(0) SECRET OF**
Calendar Stone	Grave	Idol	Gem	Throne	Spear	Rare Plant	Mysterious Ruins
Stone Tablet	Skeleton	Signet Ring	Platter	Chariot	Sword	Rare Animal	Lost Civilization
Scroll	Skull	Seal	Necklace	Ark/Shrine	Axe	Dinosaur	Fabled Lands
Codex	Burial Cloth	Sceptre	Bracelet/bracer	Boat	Breastplate	Giant	Relic
Monument	Ashes	Crown	Ring	Wheel	Shield	Sea Serpent	Catastrophy Site
Plaque	Mummy	Helm	Coins	Vase	Staff	Fabled Creature	Wheel of Time
Map	Hand	Robe	Goblet	Totem	Flail	Vanished Race	Fountain of Youth
Clay Tablet	Raiment	Medallion	Sculpture	Pottery	Throwing stick	Evolved Race	Philosopher's Stone
Tapestry	Bust	Horn	Belt/Girdle	Chest	Net	Intelligent Animal	Unicorn's Horn
Figurine	Death Mask	Banner/Flag	Masks	Table	War Club	Prehistoric Man	Shape Shifters

* PRECIOUS — Double the Value on the second **Treasure Table.**

** SECRET OF — Check below to see what secret is learned about item. The judge should create the actual secret once he learns what it is about.

Secret Discovered

1) Message/Language of-
2) Behind the Power-
3) History of-
4) Cause of-
5) Creators of-
6) Hidden location of-
7) Purpose of-
8) Ritual of-
9) Weakness of-
0) Key to Control of-

Definitions of Living Proof & Secrets:

Here are some examples of what some of the categories might include.

LIVING PROOF

Fabled Creature might be a dragon, a unicorn, a mermaid, or a gargoyle.
Vanished Race would include Mayans, Vikings, and Atlanteans.
Evolved Race might be men with wings or with great mental abilities.

SECRETS OF...

Mysterious Ruins include Stonehenge, Easter Island and cliff carvings.
Lost Civilizations would have been built by Vanished Races.
Fabled Lands would include Shangri La, King Solomon's Mines, the center of the earth.

1.2 NATURE OF FIND

1-3) Special*
4-9) Common
0) A Fake**

* Special — Check on the following Special Power Table. The judge should determine just how it works.
** Fake — An archaeologist may discover a fake by making an Instinct Check.

1.3 SPECIAL POWERS.

ODD (1,3,5,7,9)	EVEN (2,4,6,8,0)
1) Control Others	Control a Natural Force
2) Invincibility	Invulnerability
3) Healing	Antidote/Curative
4) Restore Sight	Restore Sanity
5) See Future	See Past
6) Good Luck	Victory
7) Immortality	Youth
8) Knowledge	Transmutation
9) Special Movement	Heightened Sense
0) Curse	Bad Luck

Every special power should have a weakness, a way to get around it. For example, Invulnerability should have an Achilles Heel. Each entry only hints at a category, you should narrow the definition to one specific item — such as Special Movement might be Flight, Swimming, Walking through Walls, etc. Use your imagination.

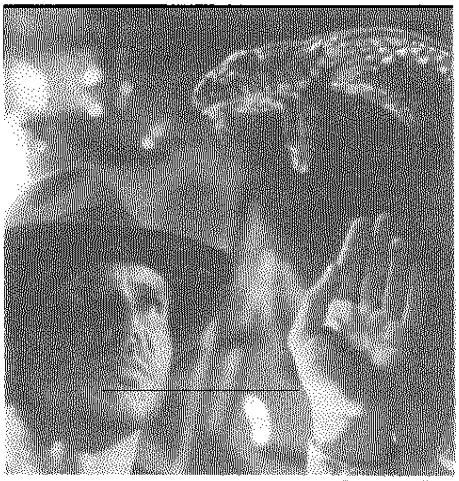

© 1984 LFL.

2.0 TYPES OF RUIN

0) **OTHER WORLDLY** — Unnatural buildings, not built by man. Oddly angled walls and floor; stone that does not show signs of a chisel and does not weather; bearing cryptic unearthly symbology that bears a resemblence to circuitry. Entrances: (1-2)

1) **NEOLITHIC** — Natural stone caves carved by the forces of nature. Cool, unworked stone bearing the crude signature of primitive man. (Caves, Caverns, Faults, Overhangs, Pits.) Entrances: (1-2).

2) **MEGOLITHIC** — Crudely shaped stone, stacked or buried by man. Immense stone structures isolated on plains and lone hills, that could only have been erected by giants, bearing runes and ancient sigils, monitoring the movement of the heavens and guarding the revered dead. (Dolmens, Cairns, Stonehenge — Tribal, Aborigine, Nordic, Celtic, Malaysian, Amerindian, African and Amazonian.) Entrances: (1-2).

3) **ADOBE** — Primitive buildings made of baked clay and straw. Earthen walls and floors, rotting beams support the ceiling; often stacked one floor upon another, linked by ladders and ramps. (Sumerian, Babylonian, Cliff Dwellers, Hopi.) Entrances (2-4).

4) **GARGANTUAN** — Colossal structures of large unmortared stone. Huge blocks of well cut stone, carefully fitted without mortar; gargantuan pillars and statues decorate their threshold and support the vault of the ceiling. (Pyramids, Egyptian, Mayan, Aztec, Incan, Atlantean.) Entrances: (2-5).

5) **CATACOMBED** — A maze of underground passageways, canals & sewers. A dank, dark series of chambers and tunnels honeycombed beneath the earth; often bearing the remains of ancestors. (Catacombs, cellars, sewers, mines.) Entrances: (2-12).

6) **COLUMNADED** — Airy buildings constructed of pillars & platforms. Rows, upon rows of pillars replace walls or adorn the face of these structures; multiple levels of galleries and stairs set off various areas; well crafted marble, granite and limestone. (Greco-Roman style.) Entrances: (1-4).

7) **ORNAMENTAL** — Intricately tiered and gabled, ornate decorations. Constructed of wood, stone and plaster; multiple cells and chambers sport marvelous statuary and detailed craft. (Oriental, Persia, India, Siam, Tibet, China, and Japan.) Entrances: (2-6).

8) **CATHEDRAL** — Superbly built forts, castles and cathedrals. Cut stone, mortared and plastered, form high vaulted ceilings and dark, dingy dungeons; castellated and adorned with fairy tale spires and stain glass windows. (Medieval Europe, Holy Roman Empire, Turkish, German, Renaissance.) Entrances: (3-6).

9) **DIG** — (Roll Again) Buried rubble and foundations of a ruined building. Requires careful excavation; resembles a quarry, with multiple levels joined by ramps and ladders and subject to cave ins. May be any of the above types.

3.0 ENTRANCES.

To determine what an entrance is roll 1d10 and add the Type Number. For Types 6, 7, & 8, add + 2 to the total. For a DIG all entries must be dug.

3.1 ENTRY WAYS.

1) Heart of a Cryptic Circle
2) Down a Crevice
3) An Underground Stream
4) Cave Mouth
5) Up Side of Mountain
6) Down Stairs into the Earth
7) Down a Long Tunnel
8) Through a Tomb
9) Down a Shaft
10) Blind Canyon
11) Hidden behind a Natural Feature (Bush)
12) Mouth of a Cliff Carving
13) Trapdoor in Ruins
14) Secret Door in Temple
15) Ancient Door in Wall
16) Gallery of Columns
17) Secret Door in Idol
18) Hidden Courtyard
19) An Archway
20) Top of a Monument

3.2 ENTRY HALLS.

Once you know the location of the entrances, roll 1d10 for each entry or pick one of the entry halls below to start mapping the ruin.

ENTRY HALLS

key pillars rubble well/chasm ledge statues

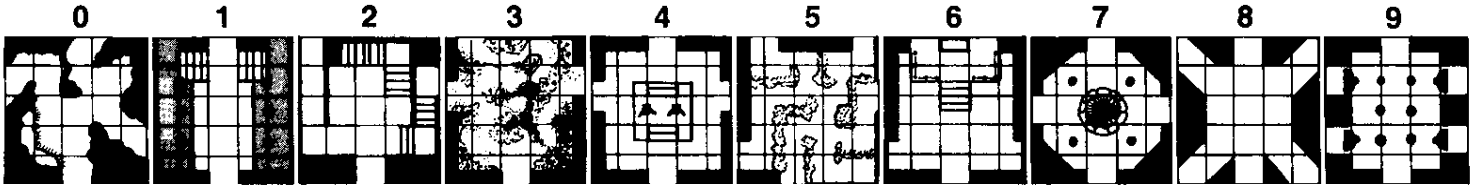

* Antechamber — roll another room; two rooms are connected by a door. ** Secret Room — roll again, a second room is connected by a secret door.

4.1 HALL OR ROOM/NOTEWORTHY?

Die Roll	Meaning	Die Roll	Meaning
ODD (1,3,5,7,9)	HALL	EVEN (2,4,6,8,0)	ROOM
		1,2,3,4	Nothing
		5,6,7,8,9,0	**NOTEWORTHY**

4.2 ROOM SHAPES.

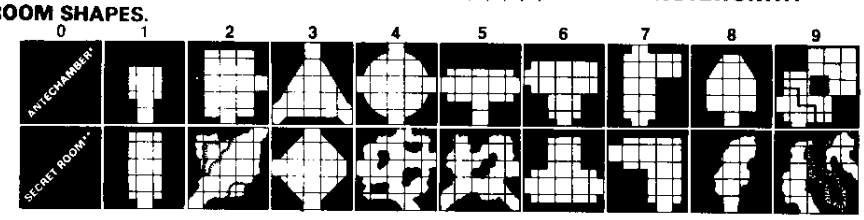

* Antechamber — roll another room; two rooms are connected by a door.
** Secret Room — roll again, a second room is connected by a secret door.

4.3 HALL SHAPES.

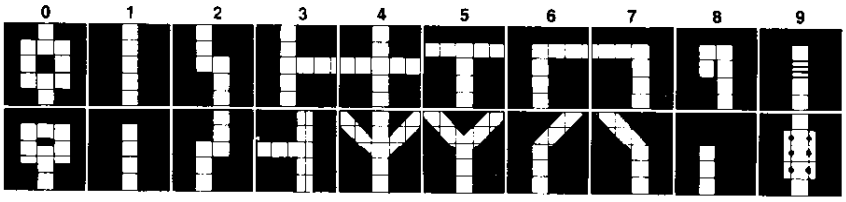

5.1 FEATURE OR CONTENTS.

When using this section to create a description for the area use the terms given in the following phrases:

FEATURE: "The (feature) is (description)."

CONTENTS: "The area contains (contents) that is (description)."

ODD (1,3,5,7,9) = FEATURE
EVEN (2,4,6,8,0) = CONTENTS

FEATURE	HALL CONTENTS	ROOM CONTENTS
1) The Walls are	Pillars	A Dais and Throne
2) The Floor is	Rubble	A Platform
3) The Ceiling is	Stone Benches	A Dead Tree
4) The Entry is	Statues	A Stone edge Pool
5) Before You is	Boulders	A Fountain
6) The Corners are	Scaffolding	An Altar
7) To the Left is	Tapestries	An Idol
8) To the Right is	Pottery	A Large Table
9) The Far Wall is	A Stream channel	A Sarcophagus
0) Beside the Entry is	A Bridge	Support Beams

5.2 DESCRIPTIONS.

Once you have rolled a Feature or Contents, roll again for the description.

(1,2,3,4) FEATURE CONTENTS	(5,6,7) (1,2,3,4,5)	(8,9,0) (6,7,8,9,0)
1) Crumbling	Huge	Small/Narrow
2) Barren	Broken/Cracked/Torn	Rough Hewn/Made
3) Caved In	Untouched	Well Crafted
4) Damp/Dry	Covered with Cobwebs	Tiled/Inlaid
5) Cloaked by a Mist	Overgrown	Covered with Paintings
6) Cloaked in Shadow	Blackened/Stained	Intricately Carved
7) Caressed by a cool/warm breeze	Crusted with Mud/Ice/Mold	Cool/Warm to the Touch
8) Covered with Dust/Dirt/Slime	Buried beneath Leaves/Sand	Oddly shaped/distorted
9) Buckled	Littered	Plain
0) Unblemished	Toppled/Empty/Worn	Pristine

6.2 NOTEWORTHY ROOM.

Die Roll	Type
01-10	Treasure
11-16	Find
17-31	Trap
32-36	Secret Way
37-43	Creature
44-53	Obstacle
54-59	Predecessor
60-63	Spectacle
64-66	Incredible
67-72	Dilemma
73	Treasure & Trap
74	Treasure & Secret Way
75	Treasure & Obstacle
76	Treasure & Predecessor
77	Treasure & Dilemma
78	Find & Trap
79	Find & Creature
80	Find & Incredible
81	Trap & Secret Way
82	Trap & Creature
83	Trap & Obstacle
84	Trap & Predecessor
85	Trap & Spectacle
86	Trap & Dilemma
87	Secret Way & Dilemma
88	Creature & Obstacle
89	Obstacle & Predecessor
90	Obstacle & Spectacle
91	Treasure-trap-Secret Way
92	Treasure-Trap-Obstacle
93	Treasure-Creature-Predecessor
94	Treasure-Obstacle-Dilemma
95	Find-Trap-Spectacle
96	Find-Creature-Incredible
97	Trap-Obstacle-Predecessor
98	Secret Way-Predecessor-Dilemma
99	Treasure-Trap-Predecessor-Incredible
00	Find-Trap-Creature-Dilemma

7.0 PLACEMENT.

This defines where each Noteworthy item is located. You should roll or choose each item. The judge should decide what the "item" is based on the description of the area.

1) In the center of area
2) On something
3) Behind something
4) In a secret chamber/Hidden
5) Beneath something
6) In something
7) Across the area
8) Beside the entrance
9) Above in the rafters
0) Disguised as something else

6.0 NOTEWORTHY ITEM.

Roll on the following tables to determine what the Noteworthy item is. You may have several items in the same area. Then go to the tables below to determine what each item is.

6.1 NOTEWORTHY HALL.

Die Roll	Type	Die Roll	Type	Die Roll	Type	Die Roll	Type	Die Roll	Type	Die Roll	Type
01-06	Treasure	58-62	Spectacle	76	Treasure & Obstacle	82-83	Trap & Predecessor	90-91	Obstacle & Predecessor	97	Trap-Obstacle-Predecessor
07-23	Trap	63-66	Incredible	77	Treasure & Predecessor	84-85	Trap & Spectacle	92	Obstacle & Spectacle	98	Trap-Creature-Dilemma
24-28	Secret Way	67-73	Dilemma	78	Treasure & Dilemma	86	Trap & Dilemma	93	Treasure-Trap-Secret Way	99	Secret Way-Predecessor-Dilemma
29-38	Creature	74	Treasure & Trap	79	Trap & Secret Way	87	Secret Way & Dilemma	94	Treasure-Trap-Obstacle	00	Treasure-Trap-Dilemma-Predecessor
39-49	Obstacle	75	Treasure & Secret Way	80	Trap & Creature	88	Creature & Obstacle	95	Treasure-Creature-Predecessor		
50-57	Predecessor			81	Trap & Obstacle	89	Creature & Incredible	96	Treasure-Obstacle-Dilemma		

7.1 TREASURE & VALUE

Roll once for treasure; use the two dice to determine the type of treasure — then add the dice together to get the value.

ODD	EVEN
1) Phony (Roll again)*	Spices/Medicine
2) Petrified remains	Weapons
3) Figurines	Armor
4) Pottery/Vases	Goblets
5) Furniture/Chests/Coffers	Platters
6) Furs/Clothing	Coins/Gems
7) Wood Carvings	Jewelry
8) Monument/Totem/Plaque	Tapestries
9) Paintings/Carvings	Scrolls/Tablets
0) Tools	Priceless (Roll again)**

* Phony — Ignore a reroll of priceless, no value.
** Priceless — Ignore a reroll of phony, double value.

VALUE

2)	---	12)	$ 4,000
3)	$ 20	13)	$ 6,000
4)	$ 50	14)	$ 8,000
5)	$ 100	15)	$ 10,000
6)	$ 250	16)	$ 15,000
7)	$ 500	17)	$ 20,000
8)	$ 750	18)	$ 25,000
9)	$1,000	19)	$ 50,000
10)	$1,500	20)	$100,000
11)	$2,000		

A player character may keep a Finder's Fee equal to 10% of the value of any treasure he finds and brings back.

7.2 TRAPS (Location and Trigger)

When dealing with traps roll the dice twice; once to determine the type of trap and the second time to determine where it is located and how it is triggered. Some traps have Danger Ratings, other traps will have to be assigned a Danger Rating by the judge depending on what he does with it.

TRAPS

ODD

1) Fake Trap (Roll Again)*
2) Exit blocked/Door Locked
3) Snare/Noose
4) Net/Cage drops
5) Flash of Light**
6) Crash of Sound**
7) Sliding Floor opens onto Pit
8) Dart/Arrow/Spear (PR:40)
9) Quicksand
10) Catapult Spot*** (Fall DR = 80)

EVEN

1) Pit (Deep/Spiked/Crocodiles)
2) Swinging Blades/Spikes (DR = 60)
3) Flaming Oil (DR = 60)
4) Falling Weight/Rolling Ball (DR = 80)
5) Cave In (DR = 120)
6) Crushing Room (DR = 40/60/80/100)
7) Room Floods with Sand/Water (DR = 60)
8) Poison Gas (10 mn/weak/1 ck/10 mn)
9) Acid/Quicklime
10) Contact Poison (1 mn/danger/2 ck/ 1 hr — sleep)

* Fake — Whatever trap is indicated, the character will not suffer any wounds only injury. This is a fake trap or there is a secret way out and is only intended to terrify intruders, not to harm.
** Blinds/Deafens characters in area for 10 min.
*** Catapult — Character is thrown 30 feet.

You may always want to provide a way to escape a trap, if the player looks for it.

Disguised as/ Hidden in	Trigger
1) In entrance way	Stepping on Something
2) In Wall	Tripwire
3) Behind wall covering	Touching/Weight removal
4) Patterned floor	Hidden lever
5) As an item in area	Move something
6) Debris	Open it
7) Hidden trapdoor	Beam of light
8) Treasure	Heat
9) Corpse	Loud noise
10) Natural feature (waterfall)	Vibrations

When using traps, you may want to misdirect players' attention from suspicious items by using something to distract them like bait, another obviously triggered trap, a howling wind, etc.

7.3 SECRET WAYS

1) Concealed Crawlway
2) Passage overhead in shadows
3) Trapdoor in floor
4) Revolving Wall
5) Hidden crevice
6) Shaft
7) Handholds/hidden ladder
8) Narrow ledge
9) Concealed/secret door
10) Behind a natural feature (waterfall, brush)

7.4 CREATURES

ODD	EVEN
1) Bats/Flock	Alligator(s)
2) Hawk(s)	Ape(s)
3) Ram	Bear(s)
4) Native(s)	Boars
5) Rats	Bull(s)
6) Scorpion	Lion(s)
7) Constrictor Snake	Native(s)
8) Poisonous Snake	Panther
9) Swarm	Giant Spider
10) Wolf(s)	Tiger

If the clime is inappropriate for a creature change to something that works (eg. a walrus, elephant, llama, snapping turtle, et al.)

7.5 OBSTACLES

ODD

1) Lava flow
2) Stairs Down
3) Ramp Down
4) Steep Slide down
5) Shifting Earth (slip & fall)
6) Brambles/Thorns
7) Balcony
8) Rushing River
9) Geyser of Steam
10) Narrow Squeeze/crawl

EVEN

1) Choking Vapors
2) Stairs Up
3) Ramp Up
4) Cliff face Up/Down
5) Windy Ledge
6) Stinging/Clinging Vines
7) Chasm/Broken Bridge
8) Hot Springs/Lime Terraces
9) Blockade/deadend
10) Marsh (Putrid water & plants)

The judge must decide what effect any obstacles will have on play.

7.6 PREDECESSORS

Predecessors are people who have entered the ruin before the player characters. These may be archeaologists or grave robbers of 500 years ago. Predecessors leave their mark on a ruin.

1) Opened doors/chests
2) Blood stains/campfires
3) Footprints
4) Scratches/scrawled messages on walls
5) Dropped gear/map
6) Broken down wall/door
7) Dead creature
8) Defaced furnishings/stolen treasure
9) Triggered trap (perhaps with corpse)
10) Corpse shot/stabbed in back.

7.7 SPECTACLES

Spectacles require the judge to create interesting descriptions of what the players see, this section just provides brief suggestions.

ODD

1) Balancing Rock
2) Moaning/Howling Wind
3) Area Glows with Eerie Light
4) Eerie Feeling/Dread
5) Lifelike Sculpture/Painting
6) Clinking and Chiming
7) Feeling of Peace
8) Network of Lightbeams
9) Mirage/Reflection*
10) High Vaulted Ceiling (60')

* Mirage — an image that is not there but elsewhere.

EVEN

1) Swirling lava pit
2) Beating/Pulsing Sound
3) Statically Charged Air
4) Clanking Sound
5) Feeling of Nausea/Dizzyness
6) Bottomless Pit/darkness
7) Gonging
8) Gilded Walls/Dancing light
9) Panoramic View
10) Looming Monument/Tower/Idol

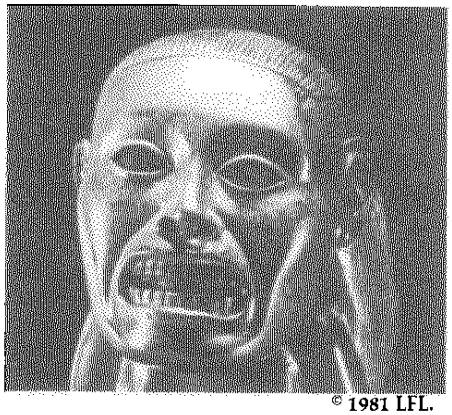

© 1981 LFL.

7.8 INCREDIBLE

The Incredible borders on the fantastic, however it can easily be accepted as possible, if somewhat bizarre. Beyond the Incredible is the Unknown and that is detailed in a section following.

ODD

1) Mammoth Solar Calendar
2) Huge Natural Magnet
3) Natural Laser (burns things)
4) Wind Tunnel (Pneumatic Tube)
5) Natural Magnifying Lens
6) Huge Wind Mill/Turbine
7) Glowing Crystal
8) Echo Room
9) Giant Lightning Rod
10) 60' Tall Gong

EVEN

1) Giant's Room
2) Midget's Room
3) Non-human Room
4) Giant Insect Colony/Rat Den
5) Crystalline Chamber
6) Immense Waterwheel
7) Dancing Swarm in Hive
8) Amplification Room
9) Heavenly Voices—Natural Radio
10) Crude Static Electric Generator.

7.9 DILEMMAS

Dilemmas are hazards that need to be crossed or tasks that must be undertaken to continue. This section breaks Dilemmas down into the action needed to succeed, followed by suggestions of the type of hazard that must be overcome. The judge should decide what exact hazard the characters will face. The ability which the player would need to check has also been listed. The judge should also decide how difficult the action is and what modifiers to use.

ACTION		HAZARD
1) Nerve to Pass	(BK)	Fear — snakes, fire, height, hot coals.
2) Climb	(MV)	Cliff face, shaft, trees.
3) Balance	(MV)	Narrow ledge, ice, tightrope.
4) Jump Across	(MV)	Chasm, Pit.
5) Jump/Dive Down	(MV)	Waterfall, a Dropoff.
6) Swim	(MV)	River, submerged tunnel.
7) Swing	(MV)	Vine, or rope across a gap; flagpoles.
8) Dodge	(MV)	Falling rocks.
9) Care	(PR)	Poisonous plants, minefield, trip wire.
10) Endure	(BK)	Poison gas, swimming underwater, hanging on.

© 1981 LFL.

DEALING WITH THE UNKNOWN

Dealing with the Unknown is fairly common in THE ADVENTURES OF INDIANA JONES™* game. The Unknown is the weird, the unexpected, displays of unearthly, legendary power resulting in something either seemingly impossible or scientifically advanced. The Unknown is encountered fairly frequently by *Indiana Jones* as he searches for the Lost Ark or encounters the legendary *Sankara Stones* and the power of *Mola Ram*. The Unknown should have a place in your adventures too, for it adds a touch of the bizarre, adding excitement, giving a challenge that seems worth facing if only to tell of the encounter.

You can add the mystery of dealing with the Unknown if you take care. Here are some suggestions for how to add it to your adventure and a couple lists of the Unknown to give you ideas. When dealing with the Unknown in an adventure it can be used in the following manner.

- As the goal for the heroes and villains;
- As an unexpected, uncontrollable display of mysterious effect;
- As the method to activate a legendary power;
- As inspiration to a character in his moment of dire need;
- and As a villain's evil power.

There are three major types of the Unknown: an item of legendary might, a mysterious power possessed by another character, and a power that is not possessed by a character, but seems to have a will of its own, like a haunted house.

First, determine the type of the Unknown in your adventure; one type is more than enough, you don't want it to be commonplace because then it won't be mysterious. You can use the power of the one Unknown several times.

Note, it is possible that the apparent mysterious power is a hoax, with another character using gimmicks to make it appear he has some strange power. The uncertainty of whether the power is real or not will add even more mystery.

Second, determine how and when the Unknown will manifest in your adventure. It should not be too early or else it will lose impact, though you may hint at it through tales told by other characters, legends remembered and premonitions. It is best to leave the final unveiling of the Unknown to the climax of the adventure.

Finally, at the end of an adventure, don't leave the power in the hands of the player characters. That could lead to super human characters that wouldn't be any fun to play. Instead, arrange to take the power away, destroy it or negate its ability at the end.

Below are three tables: one on Types, one on Manifestations and the last a list of possible encounter types for a ruin.

TYPES OF THE UNKNOWN

1) Curse
2) ESP
3) Haunting
4) Conspiracy
5) Hoax
6) A Relic of Power
7) Science Breakthrough
8) A Secret Society
9) UFO
10) Marvel of Nature (Borealis)
11) Hypnosis
12) Strange Land
13) Legendary Creature
14) A Lost Race
15) A Mystic Conjunction
16) Voodoo
17) Time Travel
18) A Secret Ritual
19) Illusion/Magic
20) Underwater Land

MANIFESTATIONS

1) As an artifact
2) As a Villian's Power
3) Inspiration
4) Miracle
5) As a Dream
6) As a Vision
7) Causes a special Feeling in all
8) Mysterious Accidents
9) Mysterious Aid
10) Display of Power

UNKNOWN ENCOUNTERS

1) Ghostly Manifestation	Scrying - seeing elsewhere
2) Levitation	Legendary creature/alien
3) Ability to breathe water	Animated inanimate
4) Living Fire	Speed - makes one move much faster
5) Giant Automaton	Slow - makes one move much slower
6) Monster Clockwork Mechanism	Superstrength
7) Dematerialization	Mindspeak/telepathy
8) Chariot of the Gods	Intelligent Animals
9) Teleportal	Sand sculpture garden
10) Hypnotizing Item	Giant Mushroom Forest

CITYSTREETS

Intersection

Road*

Intersections

Deadends

Bridges — (Doesn't intersect)

Tunnel — (Doesn't intersect)

Thoroughfare**

Hazard

*(Path numbers — length of chase spaces)

**(May accelerate twice but can't change direction — median strip)

COUNTRYSIDE

3 ROOFTOPS

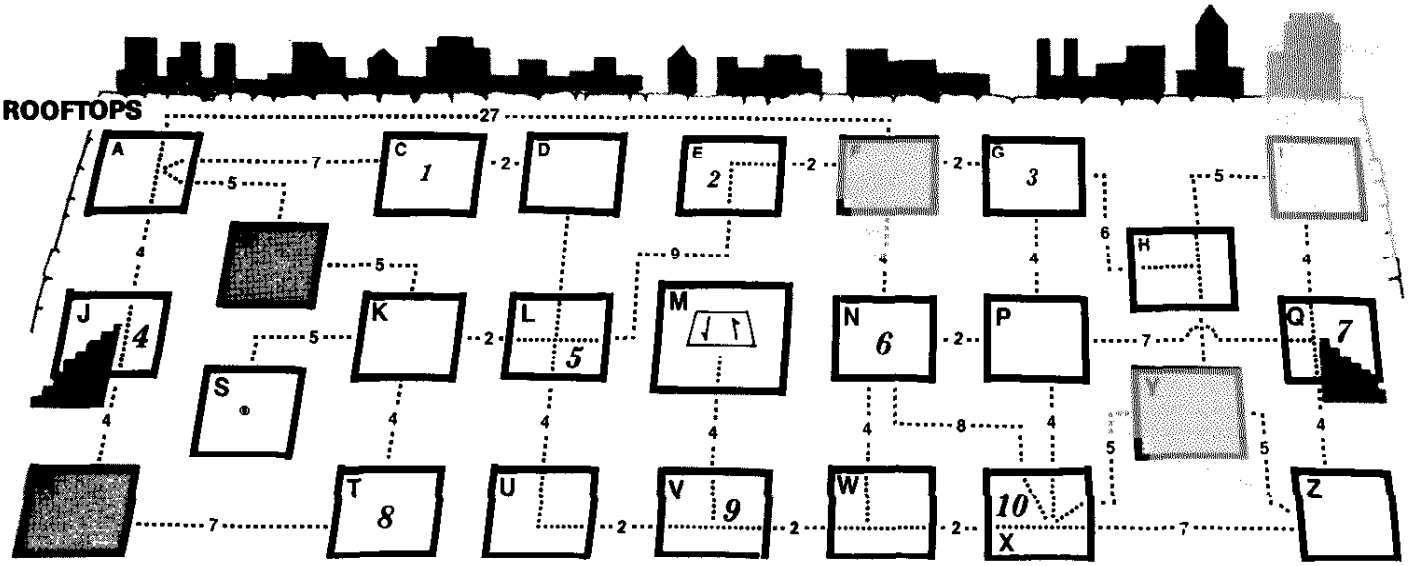

2 MIDFLOOR

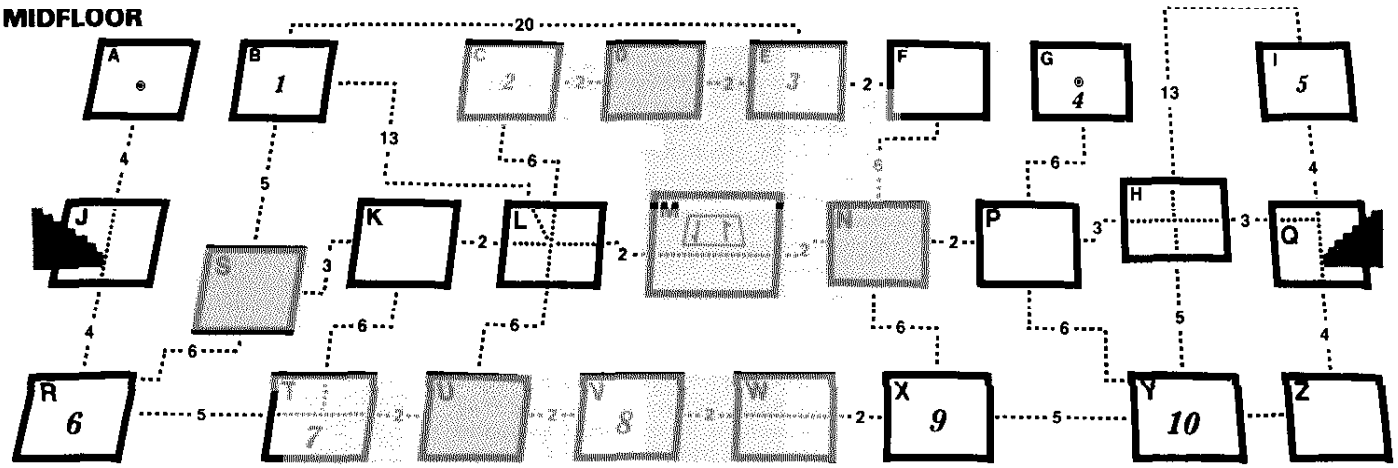

1 MAINFLOOR

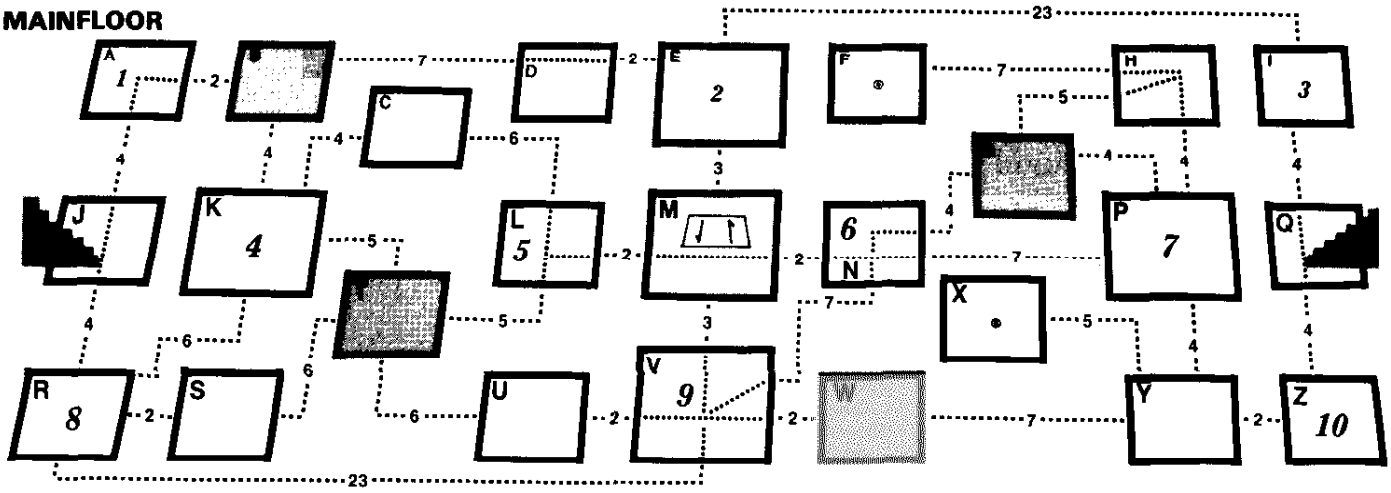

Room Hallway Stairs Elevator Hazard

SPICING UP CHASES

Along with the new ADVENTURE FOLD-UP™ vehicles, we have included a set of new rules and material to help spice up your chases. First, there are five new flow charts to add variety to your play. The flow charts were designed for Countryside, City Streets, and Building and Rooftop chases, but they can be used for much more. Following is a quick recap of how to use the charts.

1) The BOXES represent Intersections and Hazards and are counted as one space. The PATHS have numbers indicating how many spaces are between each box.
2) To START a chase on a flow chart, roll one die to determine which box to start in (only some boxes are numbered) or choose where you start. Roll or choose again to determine where the END space is.
   If the leader reaches the END space before being caught, he has gotten away.
3) Determine how much head start the Leader has and begin the chase. When the Leader loses the Chaser or reaches the End, or the Chaser catches the Leader, the chase is over.
4) If a Hazard box is entered, the one entering must roll on a Hazard table for effect.
5) If the Chaser falls more than 1 intersection behind he loses sight of the Leader and must make an Instinct check at × ½ to pick the right route.
6) If the leader is an NPC the judge may choose which way to turn at intersections,
7) Knowing the area. If a character is trying to make a choice on which is the best route to take use this rule
   - If he is very familiar with the area, the judge should tell him which is the best route;
   - If he is vaguely familiar with the area he must make a successful Instinct check for the judge to tell the best route;
   - If he is unfamiliar, the player must choose.

Two new Hazard tables have been provided on page 10 to add more variety. Also included are some new Shortcut tables. When a character wishes to try to close the distances by taking a shortcut he makes a Movement check. If the check fails, he must then roll on the Shortcut table for the result. If he succeeds, he gains spaces — 2 for a blue result, 4 for a yellow, 6 for a red or Lucky Break.

NEW VEHICLE RULES

To add further excitement here are some new rules and options.

VEHICLE DAMAGE LOCATIONS

01-30	Body
31-35	Right of Front Tire
36-45	Right or Front Fender
46-55	Front
56-65	Windows
66-75	Rear
76-85	Left or Rear Fender
86-90	Left or Rear Tire
91 00	Engine

When a vehicle is attacked it is usually from one direction and you should select the result that makes the most sense. As damage is inflicted to a vehicle it is recorded against one area and has similar effects to the Vehicle Rating as wounds do to a character's abilities. Damage adds in the same way it does to a character.

Light Damage: *Light damage to anywhere* does not affect the rating, but destroys lights and grillwork and puts dents in the body. Light damage to a tire reduces braking by 10 mph.

Medium Damage: Medium damage to a Fender, Rear or Body has no effect; but to Engine, and Front ½ rating. It destroys windows and passengers may take damage. Tires must make a rating check or blow out and then you must check on the accident results.

Heavy Damage: Heavy damage to a Fender, Rear or Body ½ the rating; to the Front ¼ the rating; to the Engine or tires must immediately check on the accident results.

STUNTING

If you thrill to wild car chases, here is how to handle some basic stunting actions.

Barriers: Each barrier is given a rating of 5, 10, 15, 20 or unbreakable. When a barrier is crashed, the driver must make a Vehicle Rating check at **x2**. If he fails he must check for an accident. No matter what happens, the rating of the barrier is then subtracted from the Vehicle Rating.

Ramming and Sideswiping: To avoid an accident when bumping another car, the driver must make a Vehicle Rating check at **x2**. No matter what happens he must then subtract the acceleration rate of the car he bashed from his Vehicle Rating.

Fancy Turns: To make skid turns and bootleg 180 degree turns, the driver must make a successful Movement check or have an accident.

Driving on Sidewalks or down a Fine Line: This requires a Movement check at **x½** to succeed without an accident.

Jumping: To jump an obstacle, there must be a ramp in front of the obstacle, the driver must be going Redline speed and he must make a Movement check at × ½.

Two Wheeling: Finally to two wheel a car or truck you must have a ramp, be driving faster than Turn Speed and make a Movement check at × ½ or check for an accident at + **20**.

FOOT CHASES:

Just to be fair here are quick rules for overcoming obstacles in a foot race.

Leaps and Climbing require a normal Movement Check.

Sliding, Swinging, Vaulting and Tackling require a Movement check at × ½ to maintain control and not get hurt.

Trapeze style swings and catches require a Movement check at × ¼ to succeed and not fall.

Walking a ledge, Jumping High, and Controlling a fall may require a normal Movement check or one at × ½ or × ¼ depending on how difficult the situation is.

HAZARD TABLES

A Hazard Table for car chases in a city already exists. Here are some new tables for car and foot chases.

© 1981 LFL.

COUNTRYROAD

1) Stream to Ford, mud on windscreen 2 rounds slow to Turn Speed
2) Bump (MV) or end up in Ditch
3) *Railroad crossing gate down (Barrier 10).*
4) Bridge Out! Must jump or skid to a stop.
5) Sharp turn suddenly in road.
6) Soft shoulder, sent into a skid.
7) Brakes fail!!
8) Cloud of Dust - Slow or (MV) for 3 rounds.
9) Blow out, check accident.
0) Hood flies open - all MV at x½ now until closed

BUILDINGS

1) Loose Carpet (MV)
2) Clutter in hall, must leap
3) Closed Door, stop and open
4) Crowd, (AP) to get through
5) Door opens suddenly (½MV)
6) Cleaning lady with cart (½MV) to get around.
7) Wet Floor (¼MV)
8) Cord across floor (MV)
9) Darkness - Stop or (½MV) till find some light.
0) Laundry in Hall (MV)

SHORTCUTS

VEHICLES

1-2)	Crash through a storefront (check on crash)
3-4)	Crash through Garbage Cans (Barrier 5)
5-6)	Sideswipe another Car
7-8)	Alleyway shortcut found (MV) check to avoid a car sideswipe.
9-0)	One Way (½MV) or crash

FOOT CHASE

1-2)	Stumble and Fall, (Light Wound)
3-4)	Collision, collide with other (Medium Injury)
5-6)	Fall and slide 15 feet (Medium wound)
7-8)	Tumble, knocked unconscious
9-0)	Shortcut roll (MV) to avoid colliding with another.

RUNES AND SECRET WRITINGS

Many classic adventures begin with the hero finding an obscure clue written in an ancient language. Others begin with the hero finding a cryptic warning or coded map. How can you add secret writing to your adventure?

Using the alphabets here, it's quite easy. First, you must of course have an opportunity to have a secret message in your game and a reason for it. Second, you must write the message down. At this point you might want to translate your English into simple sounds — "cable" becomes "kabel" for instance. Third, find the symbol or substitute for each letter or letter pair (such as TH) and rewrite the message with the new alphabet. In some cases, the alphabet does not have an equivalent letter, so alternate letter symbols have been proposed or you may leave a space for the missing letter. This will help to further confuse the message for the translator.

You now have some secret writing. As is, a simple decoding will reveal the meaning of what you have written. If you wish to make it harder to decipher the message, you can write the message backwards, word for word. To be even more devious, try altering the location of verbs within sentences or leave out part of the message as if it have been damaged.

To be fair, any player with a character who can read ancient languanges, should be able to use this alphabet page.

This is only a start. You can use other ancient alphabets or invent your own "ancient language" and leave clues to the translation.

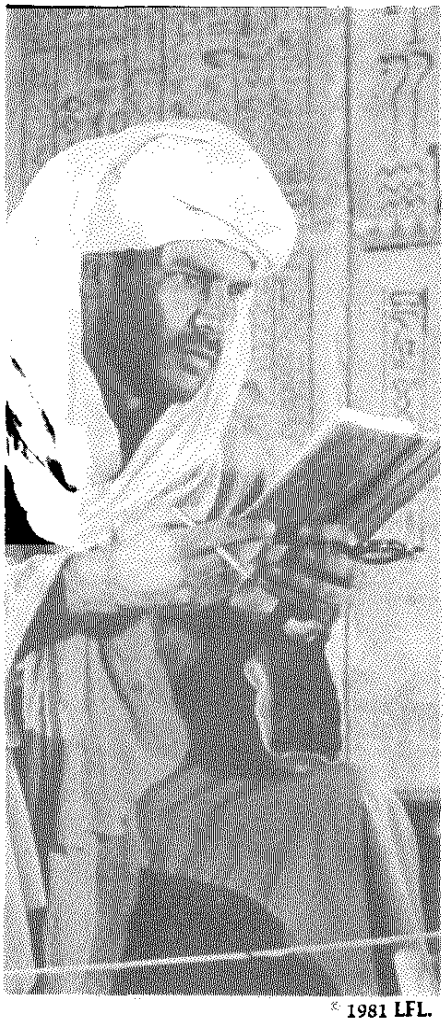

© 1981 LFL.

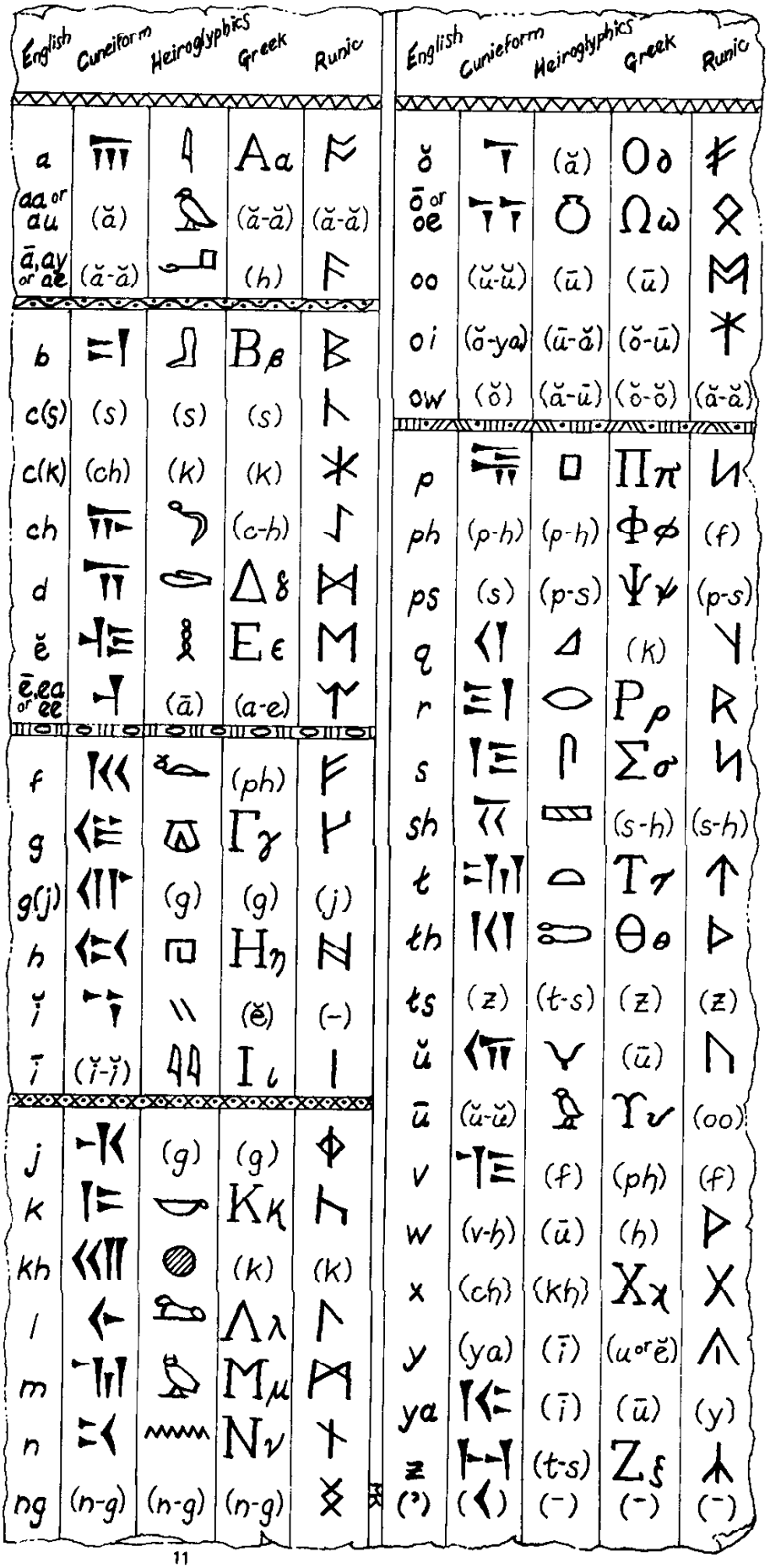

Knossos (Gargantuan)

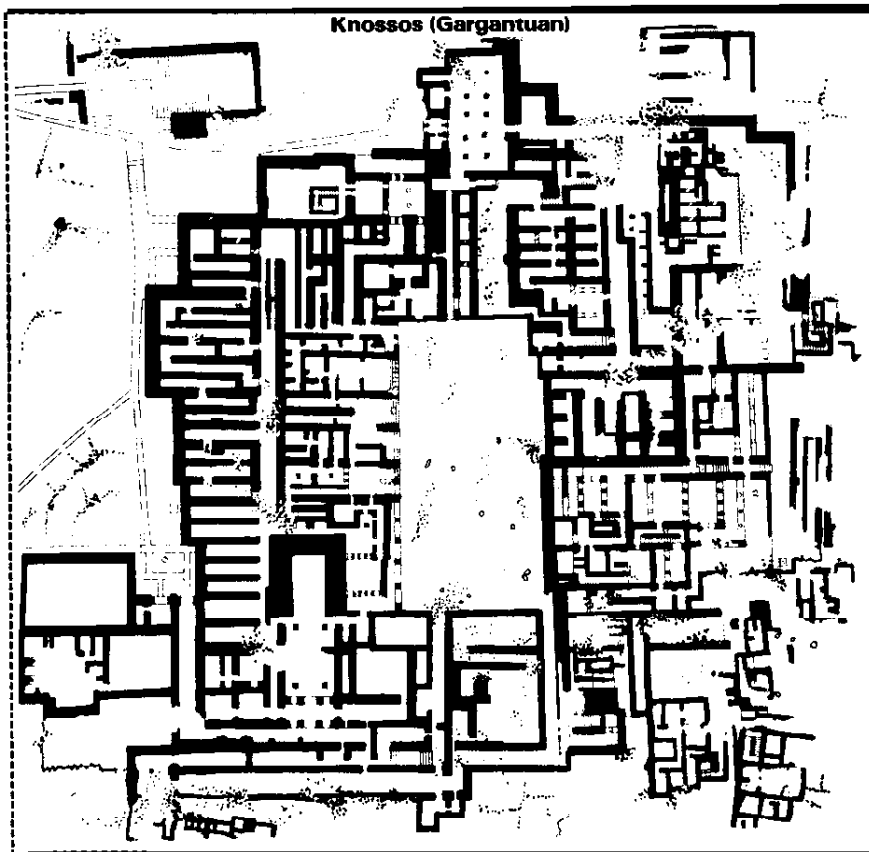

Church of the Holy Sepulchre (Cathedral)

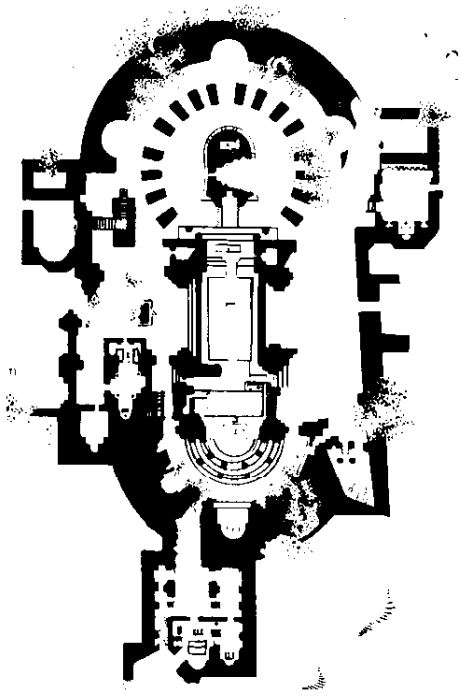

Karnak (Columnaded)

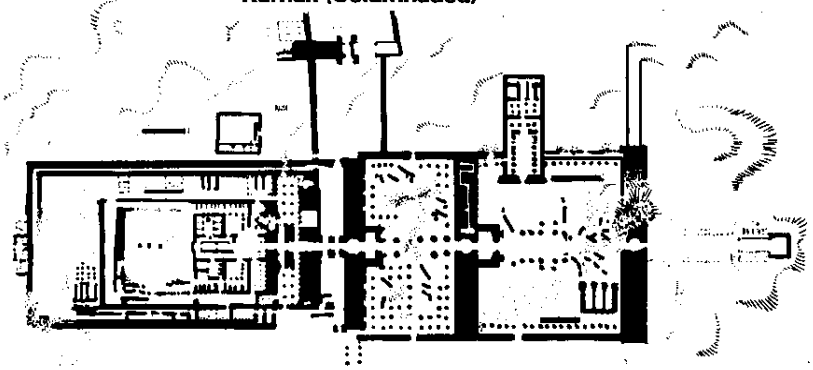

Giganteja (Megolithic)

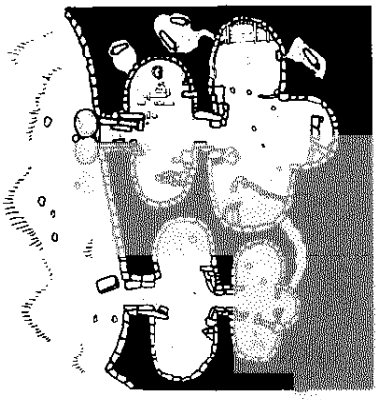

Khorsabad (Adobe)

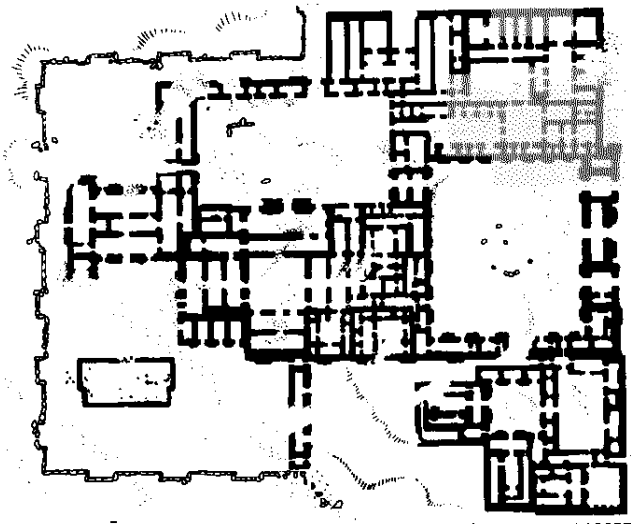

SAMPLE RUIN MAPS

Several maps of actual ruins are presented here for use when a map is needed swiftly during play. In your campaign, they can be lost Indian temples, or the palaces of princes long hidden from the eyes of humanity.

These maps are only tools and may be used again and again in a variety of ways. For example, you could use only a portion of a map, or change the scale of size, describing the ruin as mammoth. Switching the compass direction of the map and where a character enters from will make a ruin seem different. Add dead ends or doorways where they don't exist or collapse a section into ruin. These are only to help you design your adventures swiftly without spending a lot of time creating maps.

You can find maps of other ruins in reference books at your local library. Look for books on architecture, archeaology and art history. These will expand your options with only a small effort on your part.

How To Assemble ADVENTURE FOLD-UP™ Figures

TSR's ADVENTURE FOLD-UP™ figures are easy to assemble, because they all use the same basic shapes. Once you, know how to assemble these shapes, you can put together most fold-up figures. All you have to do is cut them apart, fold on the dotted lines and glue them together.

TOOLS NEEDED

old ball point pen	ruler
white glue	scissors
transparent tape	paper clips

SCORING FOR FOLDING

To make it easier to make straight folds along the dotted lines you should use the following method.

Before cutting the figures apart you should "score" all the dotted lines. Scoring, is creating a crease in the paper. You will need an old ball point pen that no longer writes or uses black ink, and a ruler.

To score, use a ruler to help you draw a straight line, and using the old pen, draw along the folding line, pressing down to leave a crease in the paper. Scoring before cutting the figures apart is just easier.

CUTTING APART

Use a pair of sharp small scissors for cutting. Only cut apart the pieces of one figure at a time, such as the motorcycle—so as not to lose any pieces.

Most pieces are labelled with a number and a letter. The number indicates the order to which to assemble the piece. The letters indicates which figure the piece belongs to.

A = Jeep	C = Motorcycle
J = Jeep	S = Staff Car
T = Truck	

Cut only on the solid black outlines. The dotted lines are for folding.

FOLDING

The figures fold one of two ways, backwards or forwards. Backwards folds are noted by a dashed line. Forward folds are noted by a dash and dotted line. Study the figures carefully before folding, some pieces fold both ways.

ASSEMBLING

Each figure should be assembled in the order of the numbered pieces as noted in the diagrams below. Assemble piece #1 first and then piece #2 and so forth.

GLUING

Most places that are to be glued are noted with the symbol for "glue here." There are two exceptions and these are noted with the figures following.

To glue apply the paste thinly and evenly all the way to the edges of the space to prevent lose corners. Paperclips are useful for holding a figure togethe until the paste dries. If corners do become unglued, a bit of transparent tape can be used to hold them down.

When gluing, it is best to glue one side at a time and let it dry before gluing the other sides, for a more even shape.

SYMBOLS

Cuts ————	Fold Up – — – – — –
Glue Here ▒	Fold Down – – – – – – –

These are the symbols which are used on the full color fold-ups.

A. ARK BOX

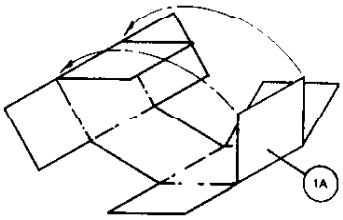

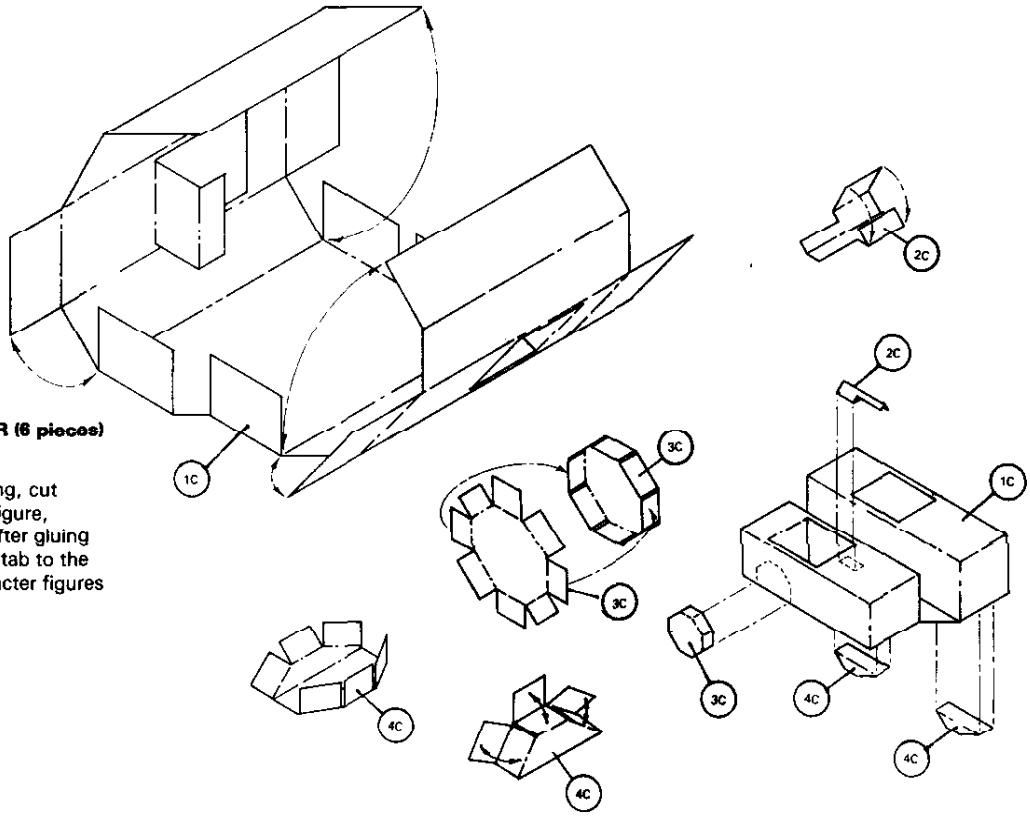

C. MOTORCYCLE AND SIDE CAR (6 pieces)

1. Body and seats
   (To create the seats, before folding, cut along the slots in the top of the figure, starting at a corner of the slot. After gluing all other sides, glue the thin seat tab to the inside bottom. You can put character figures from the game in the seats.)
2. Machine Gun
3. Sidecar wheel
4. Motorcycle wheels

T. TRUCK (29 pieces)

1. Chassis
2. Engine Hood
3. Cab
   (Before gluing, cut out 14T, the steering wheel, and glue to the dashboard with a spot of glue.)
4. Flatbed Wall
5. Fenders
   (Once assembled these glue to the underside and side of the chassis.)
6. Front Bumper
7. Headlights
8. Seat
   (Glues to the floor of the cab.)
9. Cab Roof
   (Do not glue to cab; use as box top, then characters may be placed in cab.)
10. Luggage Rack
11. Rear Canopy
    (Do not glue to truck; just slide into place, then may use as flatbed when desired.)

12/13. Truck Wheels — Front & Rear

B1/B2. Machine Gun and Tripod

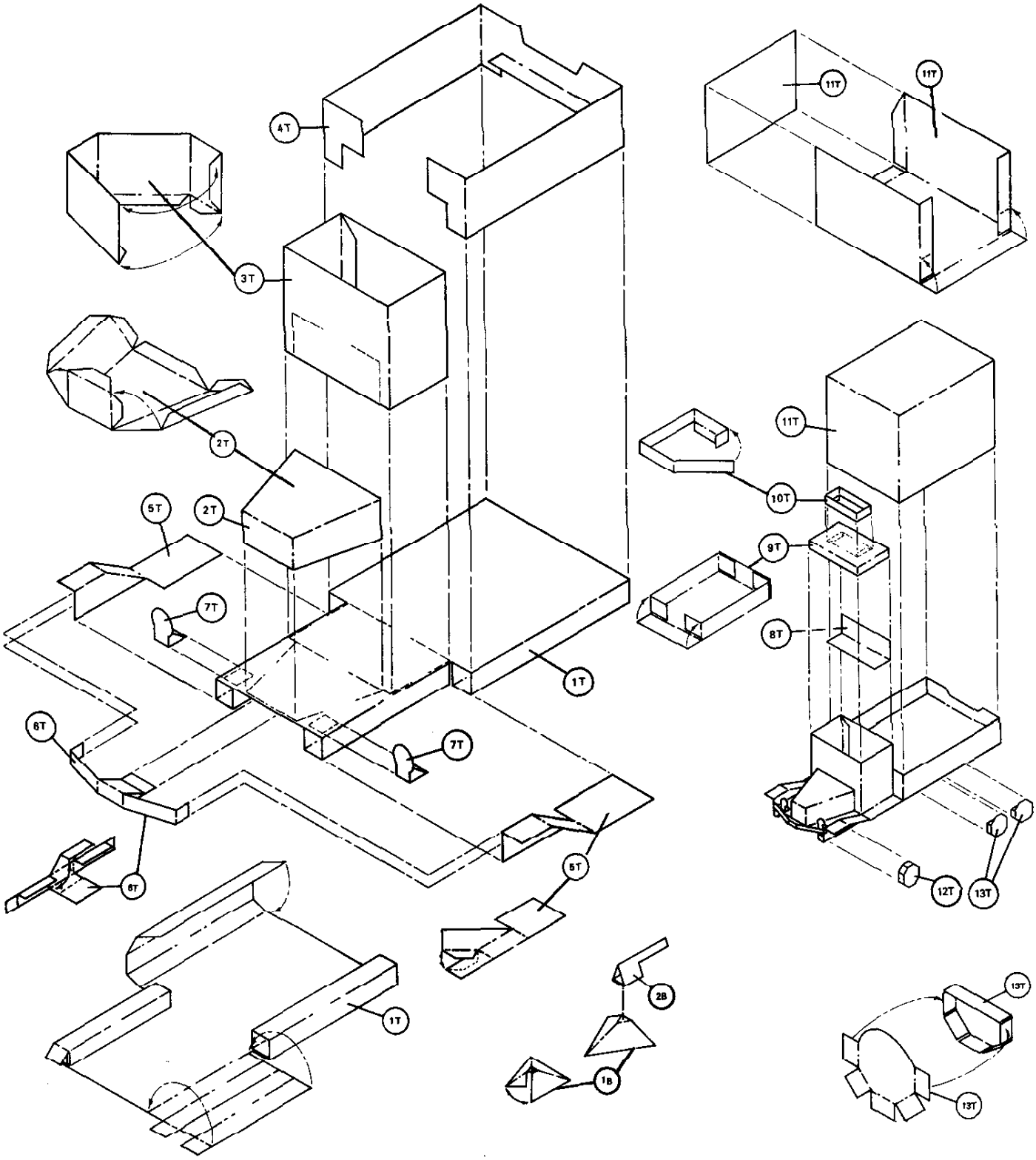

J. JEEP (23 pieces)

1. Chassis
2. Engine Hood
3. Dashboard
   (Before attaching the dashboard, glue 13J, the steering wheel to the dashboard with a spot of glue.)
4. Front Divider
5. Rear Divider
6. Fenders
   (Fenders attach to the underside and side of the chassis.)
7. Front Bumper
   (Should hide the end of the chassis tubes.)
8. Headlights
9. Seats
   (Glue to floor and divider wall.)
10. Gun Mount
11. Machine Gun
12. Wheels

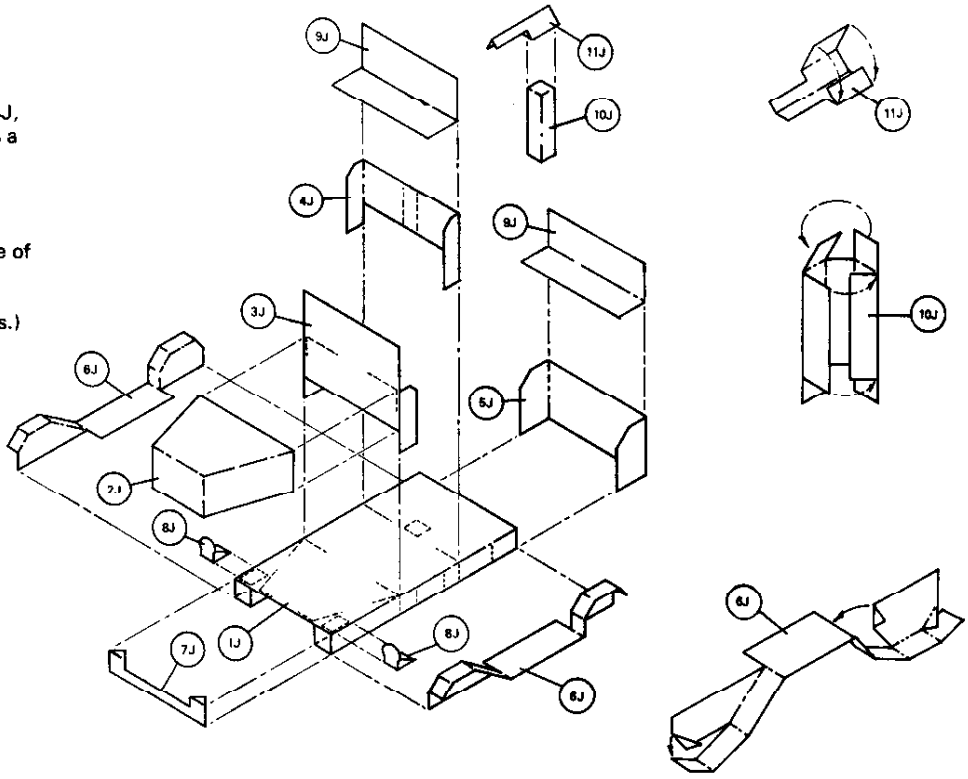

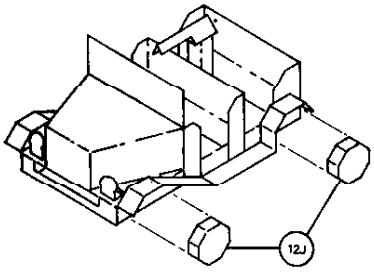

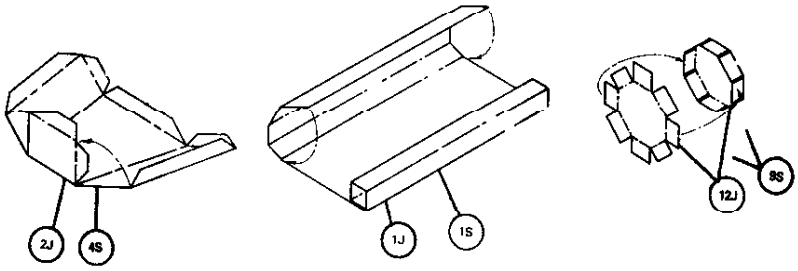

S. STAFF CAR (20 pieces)

1. Chassis
2. Dashboard
   (Before attaching the dashboard, glue 10S, the steering wheel to the dashboard with a spot of glue.)
3. Rear Trunk
4. Engine Hood
5. Fenders
   (These attach to the underside and side of the chassis.)
6. Seats
   (These glue to the floor and sidewalls.)
7. Front Bumper
8. Headlights
9. Wheels

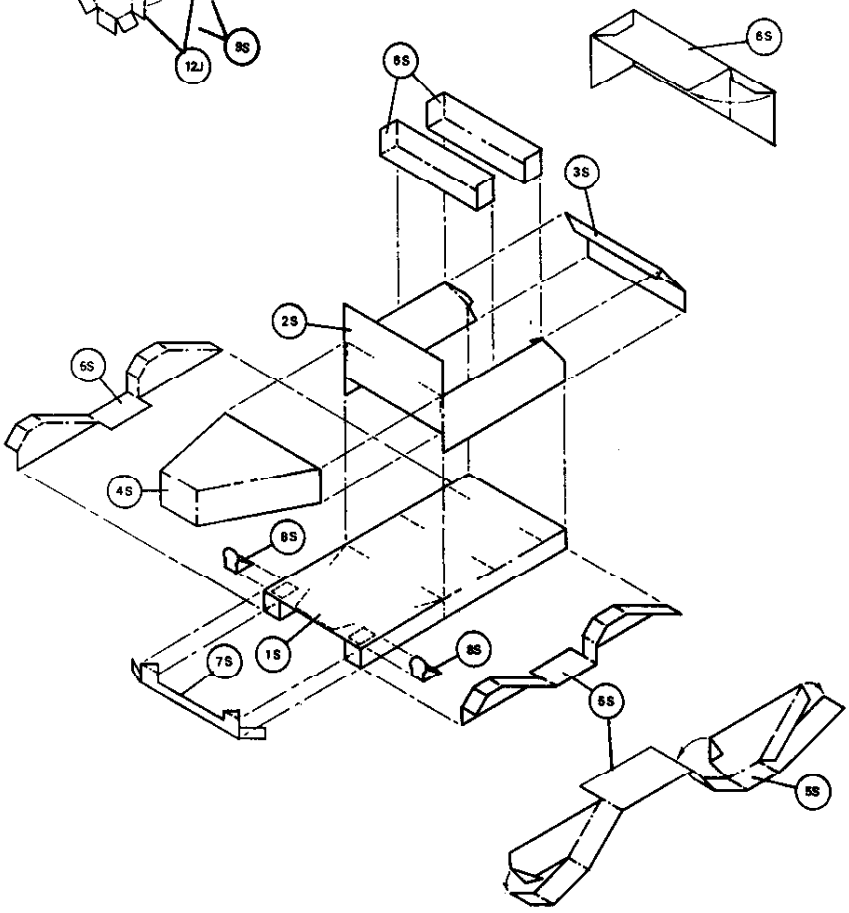

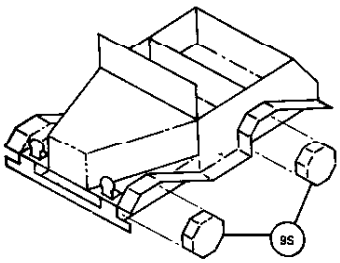

HOW TO USE

These four vehicles can be used to liven up your chases when used with the character figures in the game. The characters can ride in the vehicles. These figures are used to show the distance and position of those involved in the chase.

Used with the generic figures the vehicles may be used to perform stunts or be loaded with cargo.

Use of the figures is only limited to your imagination. For example: cutting two slots in a character figure allows you to clip the figure to the wall of the truck flatbed as if he was climbing along the edge of the truck.

Or tipping the ramp up on end makes it a wall.

Set you imagination free and enjoy!

GENERIC FIGURES

An extra sheet of generic figures has been included for use as props for creating a barroom and ruin. They also may be used with the vehicles. There are barriers to crash through, a ramp for jumps and for two wheeling, and cargo to be carried.

These shapes are simple to assemble, except for the pit. Study the diagram for the pit carefully before assembling.

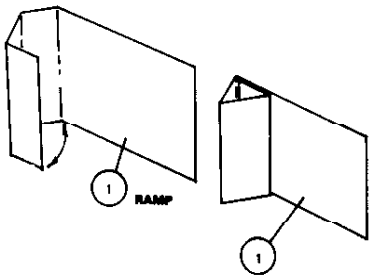

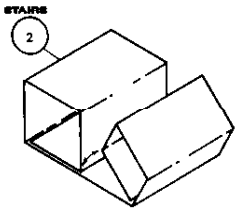

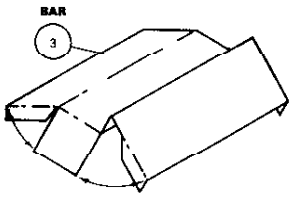

PIT

(First fold up the inside tabs and fasten much like a table. Then fold down the outside flaps and glue together.)

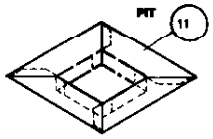

(These four use a star shape. Glue is spread on the entire back of the figures.)

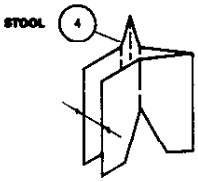

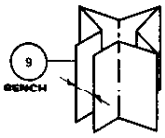

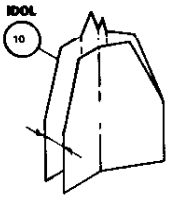

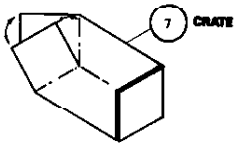

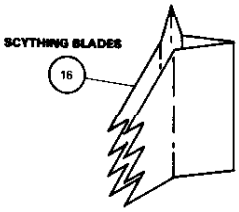

ALTAR/CHIMNEY

(These three pieces may be used together to form a fireplace or may be used separately as a nook, trapdoor and altar.)

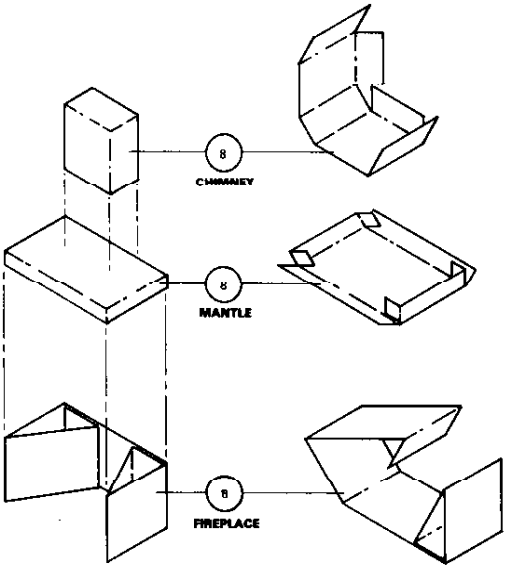

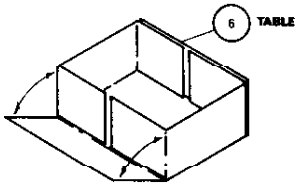

SHELVES, Tall and Short

(To add more support, you may want to use transparent tape to fasten the sides to the back. These may be also used as tables.)

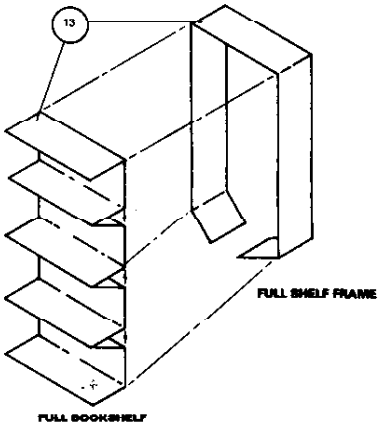

6754XXX1501

VEHICLES

TYPE	RATE	ACC	CL/DV	BRK	TRN	RED	MAX	CAP	RNG
Airplanes									
AUTOGYRO	30	20	-10/+10	20	ANY	90	110	1	250
BALLOON	10	–	–	–	–	50	70	5	200
BIPLANE	40	20	-10/+20	10	ANY	100	120	3	400
DIRIGIBLE	90	10/2	–	10/2	30	70	90	34	5000
SEAPLANE	60	20	-15/+10	20	50	80	120	9	1500
SPEEDER	50	30	-10/+30	10	100	150	300	2	300
TRIMOTOR	80	30	-20/+10	20	60	120	250	9	1000
Road Vehicles									
BICYCLE	20	10	–	10	20	30	40	1	–
Cars									
CLUNKER	30	10	–	10	30	40	50	4	100
COUPE	50	30	–	40	30	50	70	3	200
DUSENBERG	60	30	–	40	40	60	90	4	240
LUXURY SEDAN	50	20	–	30	30	70	90	8	150
ROADSTER	50	30	–	40	40	90	140	2	120
RUNAWAY CAR	20	10	–	10	30	40	70	–	–
SEDAN	40	20	–	30	30	50	70	6	160
CART/WAGON	40	10	–	10	20	30	50	6-8	–
HAND CAR	10	10	–	10	20	30	40	4	–
JEEP/STAFF CAR	50	30	–	20	40	50	70	4	120
MOTORCYCLE	20	30	–	40	30	50	90	2	50
w/SIDECAR	20	20		40	40	40	60	3	40

TYPE	RATE	ACC	CL/DV	BRK	TRN	RED	MAX	CAP	RNG
PEDICAB	20	10	–	10	10	10	50	3	50
RICKSHAW	20	10	–	20	10	10	20	2	–
SCOOTER	20	20	–	20	30	40	60	2	30
STREETCAR/BUS	80	10	–	10	20	40	50	30	120
TANK/BULLDOZER	100	10	–	10	20	30	30	5	80
TRACTOR	40	10	–	20	20	30	50	2	50
TRAIN ENGINE	150	20	–	10	50	80	120	–	350
Trucks									
LIGHT TRUCK	50	10	–	30	20	40	50	3+	150
ARMOR TRUCK	80	10	–	20	20	30	40	3+	200
HEAVY TRUCK	70	10	–	20	20	40	50	3+	250
Boats									
CANOE	10	10/2	–	10/2	10	10	20	4	–
FANBOAT	30	20	–	10	30	30	40	2	30
ROWBOAT	20	10/2	–	10/2	10	10	10	5	–
SAILBOAT	30	10	–	10/2	20	20	30	3	–
SAILSHIP	120	20	–	10	30	30	40	50+	–
SPEEDBOAT	60	30	–	10	30	40	50	6	100
STEAMSHIP	180	20	–	20	20	40	50	200+	1500
SUBMARINE	80	10	-10/+10	10	20	30	30/40*	35	800
TORPEDO BOAT	80	20	–	20	30	50	60	13	450
TRAWLER	100	10	–	10	20	30	40	20	500

* Submerged and on the surface.

© 1981 LFL

© 1981 LFL

CHASES

CHASE TRACK: This will help you keep track of the distance between opponents during a chase. To use the track, assemble the small figure of the lead car/person. During a chase, place the leader figure next to the chase track and use the following two rules to determine how many spaces separate the leader from the chaser. Always count spaces from the tail of the lead piece.

1. From a Stop:
   Add Leader's headstart + Leader's move – Chaser's move

2. Each Turn Moving:
   Leader's move – Chaser's move

Closing the Gap: This can only be done by
- taking risks, such as turning a corner too fast;
- taking a "shortcut"; roll a Movement check and if successful, gain a bonus of 1-5 spaces, if fail, check result on Shortcut hazard chart.

ABBREVIATIONS

Acc	=	Acceleration
Atk	=	Attack Damage Form (2) – 2 attacks each round
Brk	=	Braking
BK	=	BACKBONE ability
Cap	=	Capacity (Number of Passengers)
Cl	=	Climb: this is a number subtracted from speed when climbing
Dv	=	Dive: this is a number added to speed when diving
DR	=	Damage Rating
G	=	Goon
IN	=	INSTINCT ability
Inj	=	Injury damage
Max	=	Maximum speed
MV	=	MOVEMENT ability (10) – Maximum cruising speed for the creature
PR	=	PROWESS ability
Rate	=	Vehicle Rating
Rd	=	Round
Red	=	Redline
Rng	=	Cruising range in miles on a tank of gas.
Severity (+1/-1)	=	Numbers following the type of damage inflicted under ATK or after the SURV type indicate the severity modifier for damage caused or taken. – If negative, shift the result up to a lesser result. – If positive, shift the result down to a worse result.
SPCL	=	Special Attack
ST	=	STRENGTH ability *–Animals can carry up to 4X their ST score
SURV	=	Survival Type (Character Type equivalent to animals)
Trn	=	Turning Speed
V	=	Villain
Wnd	=	Wound damage
**	=	Groups of animals acting together; they may have multiple attacks as well as special attacks.

2 4 6 8 10 12 14

©1985 Lucasfilm Ltd. All Rights Reserved.

WEAPONS

TYPE	RANGE	DAMAGE	EFFECT
Bazooka:	4/ 8/16	Wnd	DR = 150; 1 area effect
Blackjack	Personal	Inj +2	Also chairs, sticks, stone axes
Blowgun	1/ 2/ 4	Inj -1	Poison — either 5 min/weak/4 chks/8 hr (unconsciousness) OR 10 min/dangerous/2 chks 24 hr (death)
Bola	1/ 2/ 4	Inj +1	Entangles; 2 rd escape
Bow & Arrows	2/ 4/ 6	Wnd	Also crossbows
Cannon (Tank)	8/16/32	Wnd +2	DR = 230; shot at 1/4 PR 50 foot effect (2 area)
Club (Rock)	0	Inj +1	Can throw in same area
Derringer	0	Wnd	One shot
Dynamite	ST in feet	Wnd	DR = 80; +20 each stick; effect = 15 feet 1 stk +5 feet per add. stick
Firebomb	ST in feet	Wnd	DR = 60; 1 area effect
Fire Extinguisher	0/ 1/ 2	Inj -1	Blinds target; extinguish 10 DR pts. fire for 3 rounds
Fire Hose	1/ 2/ 4	Inj	Buffets target; MV check or fall back 1 area; extinguish 20 DR pts. of fire a round
Flamethrower	0/ 1/ 2	Wnd	DR = 80; causes small fires (DR 20)
Grenade	ST in feet	Wnd	DR = 130; 1 area effect
Knife	Personal/0	Wnd	Can throw in same area
Landmine	Personal	Wnd	DR = 150; 1 area effect must be stepped on or driven over
Lasso	0	Inj -1	Entangles and pulls down (1/2 MV check); 2 rds to escape if not pulled taut
Machine Gun	4/ 8/16	Wnd	Fire 3 times per round; takes 2 men to use
Mortar	4/ 8/16	Wnd +1	DR = 130; 1 area effect
Musket	2/ 4/ 8	Wnd -1	One shot; 1 rd reload
Nitro	Personal	Wnd +1	DR = 200 per ounce; 1 area per ounce
Pistol	2/ 4/ 8	Wnd	6 shots; 1 rd reload
Rifle	4/ 8/16	Wnd Inj +1	6 shots; 1 rd reload When used as a club
Satchel Charge	0	Wnd	DR = 180; 40 foot effect
Spear	Personal 0/ 1/ 2	Wnd Inj	May be used as a club
Search Light	2/ 4/ 8	Inj -2	Blinds target; cuts attacks to 1/4
Submachine Gun	2/ 4/ 8	Wnd	1-3 shots per round; 1 rd to reload
Shotgun	0/ 2/ 4	Wnd	Severity +2 short range; severity -1 beyond
Sword (Machete)	Personal	Wnd	—
Tear Gas	ST in feet	Inj	Incapacitation poison; 1 min/danger/4 chks/ 2 hr; (1/4 abilities)
Torch (Flare)	0	Wnd -1	May cause fire
Whip	0	Wnd -2	Or may entangle instead

ANIMALS

TYPE	ST*	MV	PR	ATK	BK	IN	SURV	SPCL
ALLIGATOR	80	56	48	Wnd +2	60	36	G	BASH
APE	96	24	60	Wnd +1	48	32	G	REND
BARRACUDA	27	54	59	Wnd	56	40	G	—
BEAR	108	64	48	Wnd +1	64	48	V -1	HUG
BOAR (HOG)	40	56	32	Wnd	80	60	G	—
BOBCAT	20	80	40	Wnd -1	40	52	G	—
BULL (BUFFALO)	84	72(20)	44	Wnd +1	60	40	G -1	GORE
CAMEL	76	68(30)	52	Wnd	72	36	G	SPIT
CROW	10	20(20)	32	Inj	28	64	G +1	—
EAGLE (HAWK)	16	40(30)	52	Wnd	56	52	G	—
EEL	32	36	40	Wnd	52	28	G	SHOCK
ELEPHANT (RHINO)	140	48(10)	64	Wnd +2	88	32	V -2	TRAMP
ELK (MOOSE)	88	64(40)	56	Wnd	60	48	G -1	—
FLOCK**	—	56(20)	28	Inj (2)	16	28	G -1	—
GOAT (RAM)	28	72	36	Inj	56	44	G	—
GOOSE	8	16(20)	24	Inj	36	48	G	—
HERD**	—	52(20)	32	Wnd (4)	36	28	G -2	TRAMP
HIPPOPOTOMUS	108	32(10)	56	Wnd +1	68	36	G -2	SWAMP
HORSE	84	56(50)	60	Wnd	64	88	G -1	—
LION	96	76(20)	68	Wnd	76	60	V	—
MAGPIE	4	32(10)	40	Inj -1	68	40	G +2	—
MONKEY	6	24	6	Inj -1	20	28	G +1	—
MULE	60	84(20)	48	Wnd	80	56	G	—
OCTOPUS (SQUID)	120	36	44	Wnd +1(4)	72	36	V -2	INK
OSTRICH	76	44(30)	36	Wnd -1	44	28	G	—
OTTER (WEASEL)	8	92	28	Inj	48	48	G	—
PACK**	—	52(10)	56	Wnd (3)	56	40	V -2	—
PANTHER (JAGUAR)	76	88(30)	72	Wnd	60	68	V	—
PIRANHA**	—	48	32	Wnd (2)	24	16	V	—
PORPOISE	68	76(50)	84	Wnd	68	80	V	—
RAT	4	60	44	Wnd	28	28	G +1	—
SCORPION	1	24	28	Wnd -1	76	20	G +2	POISON
SHARK	88	96(40)	80	Wnd +1	64	36	V -1	REND
SNAKE,Constrictor	52	28	48	Wnd	32	20	G +1	CONSTR
SNAKE,Poisonous	16	32	40	Wnd -1	4	16	G +2	POISON
SPIDER	1	80	32	Wnd -1	28	60	G +2	POISON
SPIDER,Giant	100	40	48	Wnd +1	48	40	V	POISON
SWARM**	—	68(10)	48	Inj (3)	56	20	G -1	STING
TIGER	112	72(20)	56	Wnd +1	44	48	V -1	REND
VULTURE	12	28(20)	36	Wnd	36	44	G	—
WOLF (DOG)	24	44(20)	48	Wnd	44	64	G	—
WOLVERINE	80	68(20)	80	Wnd +1	96	48	V -1	REND

SPECIAL ATTACKS are made once every other round in addition to normal attacks that round and require a successful Prowess Check.

BASH	=	Light Injury
CONSTRICT	=	Injury; victim must make 1/2 STR check each round in order to act at 1/2X.
GORE	=	Medium Wound
HUG	=	Injury +1
INK	=	Blinds; cannot shoot — can only fight with non-missile weapons at 1/2X.
POISON	=	10 min / Weak / 4 checks / 24 hours
REND	=	Wound +1
SHOCK	=	Medium Injury
SPIT	=	Blinds; cannot shoot — can only fight with non-missile weapons at 1/2X.
STING	=	Wound -1 in addition to injury each round attacked.
SWAMP	=	1/2X PRW check of monster to overturn boat.
TRAMPLE	=	Injury +1

™* THE ADVENTURES OF INDIANA JONES, game elements and character names and likenesses are trademarks of Lucasfilm, Ltd. used under authorization. © 1985 Lucasfilm, Ltd. All Rights Reserved.

INDIANA JONES™*

JUDGE'S SURVIVAL PACK

Lost? Wandering? Having trouble finding your way? Then this is the product for you, the JUDGE'S SURVIVAL PACK! Add new heights of excitement to your gaming, more adventure to your play. Here are more villains! More vehicles and chases! Even a combat computer to speed play! Here are many new aids for all players and referees of THE ADVENTURES OF INDIANA JONES™* game.

This product features colorful ADVENTURE FOLD-UP™ vehicles for daring chases — featuring the truck, jeep, staff car and motorcycle from RAIDERS OF THE LOST ARK™*. This in addition to new expansions to the chase rules including stunts and shortcuts as well as new flowcharts and hazard tables will fill your chases with spine tingling excitement.

Also included are a second referee screen with new weapons, vehicles and animals. A combat computer you assemble, to speed your adventures along. Ruin maps and a random ruin generation system to create your own havens of antiquity. And much more!

This could mean the difference between a dull lifeless adventure and real survival!

This product is for use with THE ADVENTURES OF INDIANA JONES™* role-playing game from TSR, Inc. and cannot be used without the game.

TSR, Inc.
POB 756
Lake Geneva,
WI 53147

TSR, Inc.
PRODUCTS OF YOUR IMAGINATION™

TSR UK Ltd.
The Mill, Rathmore Road
Cambridge CB14AD
United Kingdom

™* THE ADVENTURES OF INDIANA JONES, RAIDERS OF THE LOST ARK, game elements, and character names and likenesses are trademarks of Lucasfilm, Ltd. (LFL), used under authorization.

© 1985 Lucasfilm, Ltd. All Rights Reserved.

PRODUCTS OF YOUR IMAGINATION, ADVENTURE FOLD-UP, and the TSR logo are trademarks owned by TSR, Inc.

0-88038-191-4
ISBN 394-54554-0TSR0675

6754XXX1401

0 46363 06754